**COMMUNITY DEVELOPMENT DEPARTMENT**
**PLANNING COMMISSION STAFF REPORT**

---

| | |
|---|---|
| **Meeting Date:** | May 18, 2022 |
| **Agenda Item No:** | 5.2 |
| **Staff Contact:** | Arlen Beck, Associate Planner<br>(949) 715-0821 \| abeck@lagunabeachcity.net |
| **Project Location:** | Laguna Canyon Channel, located between Laguna Canyon Frontage Road and Woodland Drive \|APN: 641-223-01 |
| **Case:** | Design Review 22-0735 and Coastal Development Permit 22-0736 |
| **Applicant:** | Austin Morgan, Project Manager, for Orange County Public Works<br>714-647-3981 \| austin.morgan@ocpw.ocgov.com |
| **Commissioners within a 500' Radius:** | None |

---

**Executive Summary:** Orange County Public Works requests approval of Planning Commission Design Review and a Coastal Development Permit for the replacement of a public utility structure located in the Arts District of the Downtown Specific Plan area. Design review is required for the removal and replacement of approximately 1,200 linear feet of the Laguna Canyon Channel from upstream of Laguna Canyon Frontage Road to downstream of Woodland Drive. The project consists of removal and replacement of the concrete channel in-kind, modifications to pedestrian crossings, replacement of hardscape and landscaping, and removal of existing trees adjacent to the project limits that pose a risk to the channel. Staff finds the application consistent with the intent and purpose of the Arts District, as well as the goals and policies of the Downtown Specific Plan, the City's General Plan and Local Coastal Program. The following staff report provides an analysis of the request with a recommendation for approval subject to conditions.

---

**Existing Project Site Conditions**

**Location Map**

**BACKGROUND:** The proposed project site is located within the Arts District of the Downtown Specific Plan area, with a General Plan land use designation of Central Business District. The Laguna Canyon Channel ("Channel") is owned and maintained by the Orange County Flood Control District ("District"); however, the project area is located within the right-of-way jurisdiction of several different agencies, as shown in Figure 1 below.

*Figure 1. Project Site – Rights-of-Way*

Orange County Public Works ("County") is the applicant and is replacing the Channel on behalf of the District. The project site is approximately 1,200 linear feet located from upstream of Laguna Canyon Frontage Road to downstream of Woodland Drive. In 1958, the District constructed the rectangular concrete channel, which is 12 feet wide and has a wall height that is between 8.5 to 9.5 feet tall. During heavy storm events in February 2019, approximately 265 feet of the left side Channel wall failed and collapsed. An investigation determined the primary contributor to the failure was the adjacent mature trees, and that an emergency repair was needed to maintain flood protection to the community. In March 2019, a temporary repair was implemented to fix the collapsed wall, remove adjacent trees, and add bracing to prevent additional failures. The Channel adjacent to the Frontage Road Mini-Park was not braced, and the wall tilt in that section is above what is considered allowable. Therefore, the proposed project includes the replacement of the Channel between Laguna Canyon Frontage Road and Woodland Drive with a permanent solution.

On April 6, 2021, the City Council received an update from the County regarding plans for permanent repairs to restore the structural integrity of the concrete channel and considered potential City funded enhancements to improve visual aesthetics adjacent to the Channel such as decorative sidewalk and fencing and enhanced landscaping. The City Council unanimously voted in the affirmative to (1) direct staff to pursue the enhanced aesthetics improvements along the Laguna Canyon Channel between Frontage Road and Woodland Drive with the County of Orange and return to the City Council with the cooperative agreement to implement and fund the improvements; and (2) direct staff not to pursue covering the portion of Laguna Canyon Channel between Frontage Road and Woodland Drive due to the high estimated cost of $8 million.

On August 4, 2021, the Planning Commission received an introductory presentation from the County regarding the Laguna Canyon Channel Replacement Project and reviewed the proposal in concept. The Planning Commission provided comments regarding the proposal, all of which have been addressed and the responses are attached in Exhibit A of the staff report. The project construction is scheduled to start in September 2022 and is expected to last six months. The project will consist of three construction phases to maintain as many parking spaces available as possible during construction, as shown in Figure 2 on the following page.

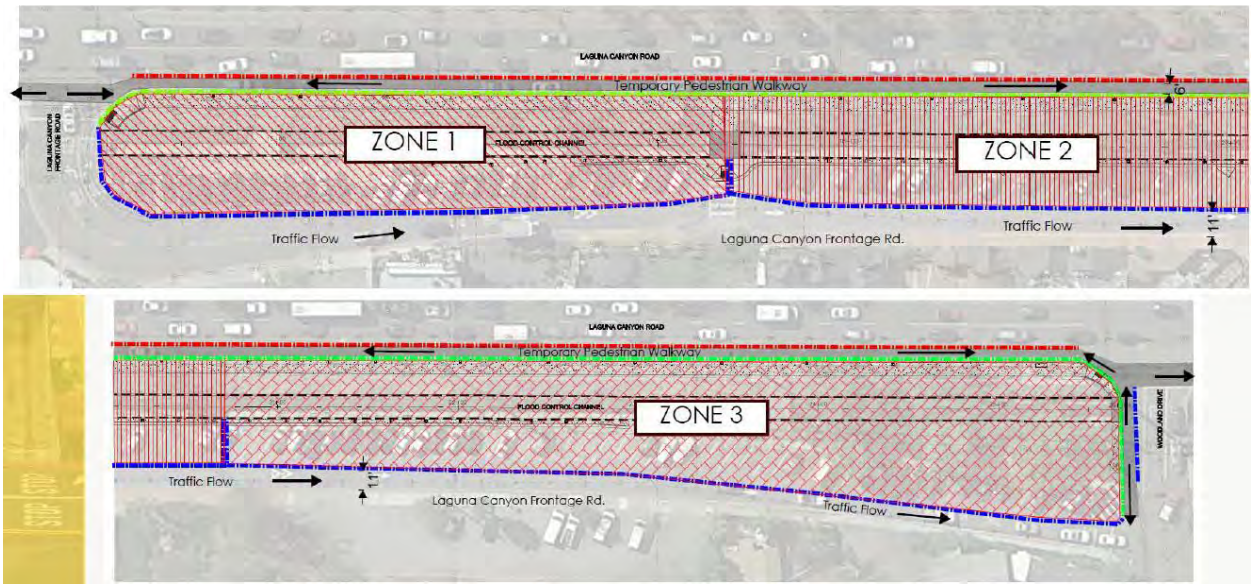


*Figure 2. Construction Phasing*

*Ames Construction*, the contractor for the project, is requesting approval of a Temporary Use Permit (TUP) to allow for the temporary placement of two construction office trailers, storage yard, and parking at 113 Canyon Acres Drive from August 1, 2022, to April 30, 2023. The project site would be used as a construction staging area for the duration of the Laguna Canyon Channel Replacement Project. The TUP is subject to review and approval by the Planning Commission as agenda item No. 5.3 at the May 18, 2022, Planning Commission meeting.

Public notice for the May 18, 2022, Planning Commission meeting was posted at the property, sent by mail to the surrounding property owners and tenants, the California Coastal Commission, others who have requested notification, and published in the local newspaper. The public notice indicated that this project is located within a non-appealable area of the Coastal Zone, however, subsequent to the posting of the public notice, it was found that the project is in an appealable area of the Coastal Zone.

**STAFF ANALYSIS:** The District's Channel was developed in the late-1950's, prior to adoption of the Downtown Specific Plan in 1989. The public utility use and structures are deemed conforming pursuant to Laguna Beach Municipal Code (LBMC) Section 25.56.018[1].

Project Overview

The County proposes to remove and replace approximately 1,200 linear feet of the rectangular concrete channel in-kind, reconfigure pedestrian crossings to improve pedestrian safety and circulation, replace hardscape and landscaping, and remove existing trees adjacent to the project limits that pose a risk to the Channel. Planning Commission Design Review and a Coastal Development Permit are requested for the replacement of a public utility structure located in the Arts District of the Downtown Specific Plan area.

This replacement project is to maintain the current flood protection and the original geometry will be maintained. Any channel enhancements or modifications are not feasible at this time as the channel is under sized. To upgrade this channel and convey 100-year flows, a secondary storm drain system is needed under Laguna Canyon Road in the future. At that time, studies can be completed to explore enhancement options to the existing channel. This project will involve relocating several below and aboveground utilities which will be more accessible after project completion.

The existing Arts District sign located at the southern entrance of Laguna Canyon Frontage Road will be salvaged and reinstalled in the same location after the channel construction. The Arts Commission has reviewed the project site for inclusion of public art on August 9, 2021 and has determined that the area has sufficient public art. The existing bus stop art bench and wooden shade structure will be protected-in-place. The existing art bike racks located north of the bus stop will be salvaged and reinstalled in the same location after the channel construction. The existing OCTA bus stop bench will be salvaged and reinstalled in the same location.

Design Review 22-0735

The County proposes to reconstruct the Channel in its current size and location with no capacity improvements. Additional project components include enhanced aesthetics improvements similar to the Village Entrance Project. Specifically, enhanced design features that will be installed as part of the project include a five-foot-tall tubular steel fence with concrete posts and a new integrally colored and textured concrete sidewalk similar to the Village Entrance. The incremental cost difference between the upgraded fence and colored concrete versus the AC pavement and the District's standard chain link fencing will be the City's funding responsibility. Examples of the proposed enhancements are shown in Figure 3, on the next page.

[1] LBMC 25.56.018: Regardless of any other provisions of this title, any public utility use existing in any building or structure, or on any premises at the time of the adoption of the ordinance codified herein shall be deemed to be a conforming use or a conforming building or structure as the case may be, in whatever district said use is conducted or whatever district said building structure or premises are located. (Ord. 1282 § 1, 1994).

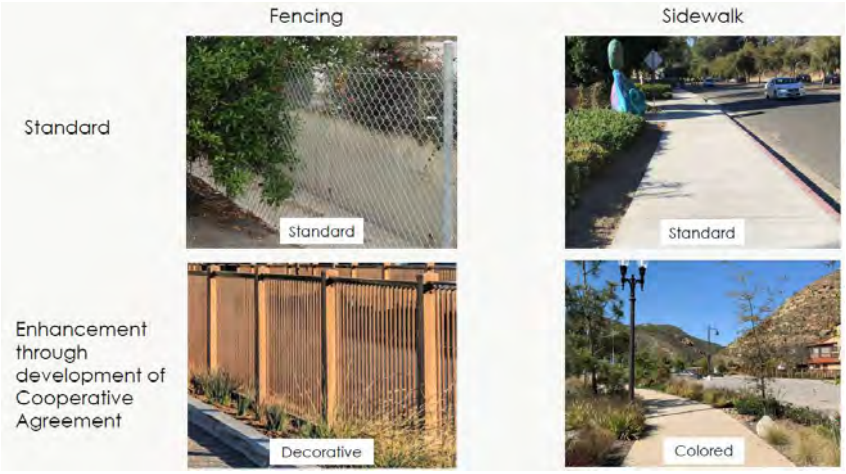


*Figure 3: Enhancements through Cooperative Agreement*

<u>Downtown Specific Plan – Urban Design Guidelines Compliance</u>
Physical improvements subject to design review should be designed and located in a manner which best satisfies the Downtown Specific Plan urban design guidelines, which focus on the composition of good design and represent the design interests and priorities of the City. As evaluated below, staff finds the proposal generally consistent with the following applicable design guidelines.

**Landscaping |Design Guideline No. 7:** *Use drought tolerant, low maintenance vegetation to the extent feasible.*

> All proposed landscaping is drought tolerant, low maintenance vegetation and complies with LBMC Chapter 19.01, Water Efficient Landscape.

**Landscaping | Design Guideline No. 10:** *Consider visual contributions to the public realm through the use of private landscaping.*

> The proposed landscaping will bring an additional seven new street trees along Laguna Canyon Road. Through the development of a cooperative agreement the sidewalk color will match that of the Village Entrance area and the overall landscaping is intended to match that of the Village Entrance area.

**Landscaping | Design Guideline No. 11:** *Design with consideration for proper management of stormwater and irrigation.*

> All irrigation is proposed to be drip irrigation and will have virtually no runoff.

<u>Design Review Criteria</u>
The proposed site improvements are required to be designed in a manner which best satisfies the design review criteria specified within LBMC Section 25.05.040(H). As evaluated in the proceeding pages and noted in the Resolution, staff finds the proposal consistent with all applicable design review criteria.

**Access.** *Conflicts between vehicles, pedestrians and other modes of transportation should be minimized by specifically providing for each applicable mode of transportation. Handicapped access shall be provided as required by applicable statutes.*

General traffic circulation will remain unhindered during construction with impacts to parking minimized to the greatest extent possible. Parking between Laguna Canyon Frontage Road and Woodland Drive along Laguna Canyon Road will be closed for the full duration of the project to provide a consistent pedestrian detour. The two northbound travel lanes will remain open for the duration of construction along Laguna Canyon Road. At each work zone, the parking along Laguna Canyon Frontage Road will be closed and lane width reduced to facilitate the work area. Water barriers with screen fencing will be used to reduce the visual impacts of construction, provide site security, and maintain a safe construction site. In general, while construction is active in one work zone, parking along the Laguna Canyon Frontage Road in the other two work zones will remain open to the greatest extent possible.

The pedestrian detour along Laguna Canyon Road will occur within the on-street parking lane. Concrete K-rails will be used to protect pedestrians from vehicular traffic with screened fencing between the pedestrian path and the work area to secure the project site and to reduce visual impacts. Periodic openings in the K-rail will occur at each work zone with proper delineators, crash barriers, and flaggers (when necessary) to provide equipment access to the site. Temporary ADA compliant ramps will be installed to ensure the path is ADA accessible.

Since the existing sidewalk along Laguna Canyon Road will be closed and parking eliminated for the duration of construction, the three pedestrian crossings will be closed during construction. To maintain access to the existing sidewalk along the Laguna Canyon Frontage Road during construction, a temporary pathway will be provided along Woodland Drive adjacent to the site with screened fencing and water barriers to protect pedestrians from vehicles. Temporary striping will be used to delineate the lane reductions during construction.

**Design Articulation.** *Within the allowable building envelope, the appearance of building and retaining wall mass should be minimized. Articulation techniques including, but not limited to, separation, offsets, terracing and reducing the size of any one element in the structure may be used to reduce the appearance of mass.*

Not applicable. No above ground building or structure is proposed.

**Design Integrity.** *Consistency with the applicant's chosen style of architecture should be achieved by the use of appropriate materials and details. Remodels should be harmonious with the remaining existing architecture.*

The proposed project will incorporate design elements, such as the channel fencing and adjacent sidewalk, that will match the Village Entrance area. In addition, the landscaping is proposed to match the recommendations of the Landscape and Scenic Highways Resource Document. Hardscape improvements are also proposed, which will include pavers to be installed at the pedestrian crossing areas of the Channel.

**Environmental Context.** *Development should preserve and, where possible, enhance the city's scenic natural setting. Natural features, such as existing heritage trees, rock out-cropping, ridgelines and significant watercourses should be protected. Existing terrain should be utilized in the design and grading should be minimized.*

The County explored multiple options to protect the existing trees between the Channel and Laguna Canyon Road. The County hired an arborist and they determined that "the only way to prevent the risk of root encroachment along the wall would be a full tree removal." An engineer was also hired to perform a structural evaluation of the channel wall. The engineer determined the tree roots applied "very large lateral pressures against the walls" which was "very detrimental to the wall and likely led to the collapse." To protect the Channel and maintain current flood control protection, the County must remove the remaining trees. In order to construct the Channel, a shoring system approximately 4 feet behind the existing channel wall is required. With an average tree distance of 5.5 feet from the channel wall, all the trees must be removed to safely install the shoring. Based on the recommendations from the arborist, engineer, and to safely install the shoring, it was determined that the trees will need to be removed between Laguna Canyon Road and the Channel.

This project must follow the Caltrans requirements for new trees within their right-of-way. The Caltrans Highway Design Manual Topic 901 denotes the requirements for installing trees within the Caltrans right-of-way. Caltrans defines large trees to have a trunk greater than 4" in diameter. They specify that large tress can be planted for speeds 35 mph and under if the tree is at least 18" from the curb face. They also specify for speeds 40 mph and greater that the trees are minimum of 18" from curb face and 30' minimum from edge of traveled way. Certain species might require additional distance from the edge of traveled way. After receiving comments from the Planning Commission, City Staff, and the public, the County incorporated small new street trees within decomposed granite (DG) tree wells at the back of the curb along Laguna Canyon Road into the project plans. Since the Laguna Canyon Road speed limit is 45 mph, this approach provides the opportunity to install seven new 24" box Western Redbud (Cercis occidentalis) trees along Laguna Canyon Road, ensures that trees are at least 10' from the channel to align with the District's policies, and is the most feasible option considering numerous existing underground utilities.

The channel adjacent to the Frontage Road Mini-Park cannot be accessed along Laguna Canyon Road due to high voltage overhead SoCal Edison distribution power lines. The existing Frontage Road Mini-Park will be used for construction access and will be temporarily impacted. Benches and trash receptacles will be salvaged and reinstalled. The rock curb, boulders, decomposed granite, planting, and irrigation will be replaced as part of this project. The County proposes to take photos to document the existing site conditions and direct the contractor to reconstruct the park in accordance with the existing photos and the Frontage Road Mini-Park record drawings.

**General Plan Compliance.** *The development shall comply with all applicable policies of the general plan, including all of its elements, applicable specific plans, and the certified local coastal program.*

The proposed project is consistent with the objectives and policies of the City's Downtown Specific Plan, General Plan, and Local Coastal Program (LCP). The proposed project has been found to adhere to Land Use Element Policies 9.1, and 9.12; and Open Space and Conservation Element Policies 4F and 4G as evaluated below.

Land Use Element Policy 9.1: *Ensure well-maintained and sufficient public infrastructure to serve the community.*

The project complies with Land Use Element Policy 9.1 in that this will replace damaged infrastructure that is needed to protect the community.

Land Use Element Policy 9.12: *Continue to consider flood hazards when reviewing projects within the 100-year floodplain.*

The project is located within the 100-year floodplain and will mitigate future flood hazards by repairing the damaged flood control channel.

Open Space and Conservation Element Policy 4F: *Water Conservation and Native Plants Ensure that development encourage water conservation, efficient irrigation practices and the use of native or drought tolerant non-invasive plants appropriate to the local habitat to minimize the need for fertilizer, pesticides, herbicides and excessive irrigation. Prohibit the use of invasive plants, and require native plants appropriate to the local habitat where the property is in or adjacent to Environmentally Sensitive Areas (ESAs).*

All proposed landscaping is drought tolerant, low maintenance vegetation and complies with LBMC Chapter 19.01, Water Efficient Landscape.

Open Space and Conservation Element Policy 4G: *Minimize Construction Impacts Ensure that all development minimizes erosion, sedimentation, and other pollutants in runoff from construction-related activities to the maximum extent practicable. Ensure that development minimizes land disturbance activities during construction (e.g., clearing, grading and cut-and-fill), especially in erosive areas (including steep slopes, unstable areas and erosive soils), to minimize the impacts on water quality.*

The project has conditions of approval which require that all Best Management Practices (BMPs) be followed during the construction process.

**Historic Preservation.** *Destruction or alteration to properties with historic significance, as identified in the city's historic resources inventory or historic register, should be avoided whenever possible. Special preservation consideration should be given to any structures over forty-five years old.*

Not Applicable. The project does not propose any destruction or alteration to any properties of historic significance.

**Landscaping.** *Landscaping shall be incorporated as an integrated part of the structure's design and relate harmoniously to neighborhood and community landscaping themes. View equity shall be an important consideration in the landscape design. The relevant landscaping guidelines contained in the city's "Landscape and Scenic Highways Resource Document" should be incorporated, as appropriate, in the design and planned maintenance of proposed landscaping.*

In order to implement the Laguna Canyon Channel Replacement Project, much of the existing landscaping must be removed and reestablished throughout the project area. The intent of the landscape design is to provide a quality, cost-effective, functional, and visually appealing

landscape program that will enhance the area consistent with other projects within the Laguna Canyon Road corridor. The plant palette will be an extension of what was utilized at the Village Entrance Project, which incorporated low water-use and California native plants. In addition, a few plants that are unique to the area around the Sawdust Art Festival will be employed in the design.

The landscape theme also incorporates rock cobble and boulders to add texture and a variety of materials to the design. The landscape design lengthens the aesthetic of the Village Entrance, expanding the gateway arrival experience into Laguna Beach, while also creating an inviting entrance to the Sawdust Art Festival area for both pedestrians and motorists along Laguna Canyon Road. See Attachment B of Exhibit B, Project Plans, for the Concept Landscape Plan and Tree Removal Plan.

The subject site is located within Zone 4 – Laguna Canyon Road: Canyon Acres to Frontage Road intersection as specified in the City's Landscape and Scenic Highways Resource Document. The landscape plan generally incorporates the recommended plantings from the resource document.

**Lighting and Glare.** *Adequate lighting for individual and public safety shall be provided in a manner which does not significantly impact neighboring properties. Reflective materials and appurtenances that cause glare or a negative visual impact (e.g., skylights, white rock roofs, high-gloss ceramic tile roofs, reflective glass, etc.) should be avoided or mitigated to a level of insignificance in those locations where those surfaces are visible from neighboring properties.*

Not applicable. The proposed project does not involve any lighting additions or improvements.

**Neighborhood Compatibility.** *Development shall be compatible with the existing development in the neighborhood and respect neighborhood character. Neighborhood character is the sum of the qualities that distinguish areas within the city, including historical patterns of development (e.g., structural heights, mass, scale or size), village atmosphere, landscaping themes and architectural styles.*

The proposed project is compatible with the existing development in the neighborhood in that the request is to replace the existing channel in-kind. The landscaping and hardscape upgrades will bring the project area to match that of the Village Entrance area, which will add to the visitor-serving atmosphere of the neighborhood.

**Pedestrian Orientation.** *Commercial development design shall enhance and encourage pedestrian uses. Incorporation of articulated building masses, compact open spaces and courtyards, mixed use developments, use of landscaping as part of design, and orientation to pedestrian access should be maximized.*

The existing pedestrian bridges that traverse the channel do not meet ADA standards. The project proposes to demolish the most southern pedestrian bridge, closest to the Laguna Canyon Frontage Road entrance. The bridge north of the most southern bridge that is in front of the Sawdust Festival building and next to the Sawdust Festival bus stop will be replaced with a 22-foot-wide ADA compliant crossing. The most northern bridge crossing near Woodland Drive will be removed and relocated to Woodland Drive, where an eight-foot ADA

compliant crossing will be installed. See Attachment C of Exhibit B, Project Plans, for the Proposed Pedestrian Crossings Concept Plan.

**Privacy.** *The placement of activity areas (e.g., decks, picture windows and ceremonial or entertainment rooms) in locations that would result in a substantial invasion of privacy of neighboring properties should be minimized.*

Not Applicable. The proposed project will not diminish the privacy of neighboring properties.

**Public Art.** *Public art is encouraged and shall be displayed where feasible or required by the Art in Public Places ordinance.*

On August 9, 2021, the Arts Commission reviewed the project site for inclusion of public art and determined that the area has sufficient public art. Landscaping in the project limits is to complement the existing public art. Furthermore, it is found that the project is exempt from LBMC Chapter 1.09, Art in Public Places Ordinance in that the project scope is for the reconstruction of a structure damaged by a flood.

**Sign Quality.** *Signs shall be incorporated into the architecture of the structure and shall be made of high quality materials, be simple in design and be visually compatible with the surrounding physical environment in terms of color, scale and size. Use of natural materials in the construction of signs is encouraged.*

Not Applicable. No signs are required or proposed.

**Sustainability.** *New development should consider architecture and building practices which minimize environmental impacts and enhance energy efficiency by: (a) reducing energy needs of buildings by proper site and structural design; (b) increasing the building's ability to capture or generate energy; (c) using low-impact, sustainable and recycled building materials; (d) using the latest best management practices regarding waste and water management; and (e) reducing site emissions.*

Not applicable. This criterion does not apply.

**Swimming Pools, Spas and Water Features.** *Swimming pools, spas and water features shall be located, designed and constructed where: (a) Geology conditions allow; (b) Noise produced by circulatory mechanical pumps and equipment is mitigated; and (c) Any associated fencing or other site improvements are compatible with neighboring properties.*

Not Applicable. A swimming pool, spa, or water feature are not included in the proposed project scope.

**View Equity.** *The development, including its landscaping, shall be designed to protect existing views from neighboring properties without denying the subject property the reasonable opportunity to develop as described and illustrated in the city's "Design Guidelines." The "Design Guidelines" are intended to balance preservation of views with the right to develop property.*

The proposed Channel replacement and associated improvements to the sidewalk and channel fencing will serve to protect and enhance the area, and are not anticipated to impact existing

views from neighboring properties. In addition, the proposed landscaping does not include any plants that are taller than the existing landscaping.

Coastal Development Permit 22-0736

The proposed project constitutes development for which a Coastal Development Permit is required and is located within an appealable area of the Coastal Zone. The proposed project complies with the following CDP review criteria pursuant to Municipal Code Section 25.07.012(F). Specifically, the proposed project is the reconstruction of the existing flood control channel in-kind and will have no greater impact upon the environment than the existing structure.

*No. 1. The proposed development will not encroach upon any existing physical accessway legally utilized by the public or any proposed public accessway identified in the adopted local coastal program land use plan.*

The project complies with this CDP review criteria in that it does not encroach upon any existing physical accessway legally utilized by the public or any proposed public accessway identified in the adopted local coastal program land use plan.

*No. 2. The proposed development will not adversely affect marine resources, environmentally sensitive areas, or archaeological or paleontological resources.*

Policy 8-J(1) and Section 30240 require development within ESA to be a use dependent upon the resource. While flood control is not a use dependent upon the resource in the same manner as a use such as nature study, it must occur within the location of the creek. Even though the project is not a use dependent upon the resource, the project may still be approved if it satisfies the more specific requirements regarding allowable development in streams 30236 which allows this type of development for the protection of existing structures and public safety. Were the project not approved, increased flooding event that threaten public safety will occur, similar to what has happened in the recent past with flooding in the canyon.

*No. 3. The proposed development will not adversely affect recreational or visitor-serving facilities or coastal scenic resources.*

The proposed development is scheduled to take place between September 2022 through April 2023 to avoid any adverse effects to the Sawdust Festival and surrounding visitor-serving facilities.

*No. 4. The proposed development will be sited and designed to prevent adverse impacts to environmentally sensitive habitats and scenic resources located in adjacent parks and recreation areas and will provide adequate buffer areas to protect such resources.*

This review finding does not apply to the project in that it is not located adjacent to any parks or recreation areas with environmentally sensitive habitats or scenic resources.

*No. 5. The proposed development will minimize the alterations of natural landforms and will not result in undue risks from geological and erosional forces and/or flood and fire hazards.*

Section 30236 requires that channelization of streams be limited to flood control projects with no other method for protecting existing structures and public safety within the flood plain. In this case the proposed project will protect the surrounding existing development located along Laguna Canyon Frontage Road and will protect and enhance the existing public access way parallel to the creek which is necessary for public safety in the area. While there are policies that encourage the creek to be restored to a natural condition, the District has determined that is not feasible at this time. Alternatives that were considered including increasing the capacity of the creek, possibly by widening the creek bed, but that would not be less environmentally damaging. The proposed project is consistent with the LCP policies for protection of streams.

*No. 6. The proposed development will be visually compatible with the character of surrounding areas, and where feasible, will restore and enhance visual quality in visually degraded areas.*

Policy 9-C(a) states "*No disturbance of major vegetation, or development, shall be allowed within the setback area. This provision shall not apply to channelized sections of streams without significant habitat value.*" Policy 9-C(a) requires a 25 foot setback for new development located near a blue line stream, however that does not apply to channelized sections of the stream without habitat value, so in this case the 25 foot setback is not applicable. Because the project is within the channelized section of the stream without habitat value, the requirement for no disturbance to major vegetation does not apply in this case to the surrounding trees. Some of the existing trees (5 Pine trees and 3 Sycamore trees) are proposed to be removed due to their health and impact on the concrete channel. 8 new native trees are proposed to be planted including Western Redbud and Sycamore trees. The LCP calls for this type of native landscaping and tree screening to protect the scenic quality of the canyon in Policies 2, 4 and 8 of the Laguna Canyon Annexation Area Specific Plan. The project is also consistent with Policy 9-M requires necessary structural flood control projects to be revegetated and camouflaged.

*No. 7. The proposed development will not have any adverse impacts on any known archaeological or paleontological resource.*

Historical records research regarding cultural resources did not reveal any known resource sites within the project area, therefore the project is unlikely to impact archaeological, or paleontological resources.

*No. 8. The proposed development will be provided with adequate utilities, access roads, drainage and other necessary facilities.*

This review criteria does not apply to this project in that the project is replacing a flood channel that does not require any utilities, access roads, drainage facilities, or other facilities.

*No. 9. Other public services, including but not limited to, solid waste and public roadway capacity have been considered and are adequate to serve the proposed development.*

Other public services are not required for this project.

The proposed project also complies with the following CDP review findings pursuant to Municipal Code Section 25.07.012(G). Specifically, the proposed project conforms with the applicable provisions of the certified Local Coastal Program as evidenced in previous Municipal Code compliance sections; the project is not located between the sea and the first public road paralleling the sea; and the project is exempt from CEQA under the Class 2 categorical exemption.

*No. 1. The project is in conformity with all the applicable provisions of the certified local coastal program.*

Several of the LCP policies require that streams be preserved and protected in a natural state. Policy 9-F of the Open Space Conservation Element calls for restoration of natural drainage courses which retain their natural function. Laguna Canyon Creek is identified as a blue line stream on the USGS 7.5 Minute Quadrangle Series, and therefore is also considered an "Environmentally Sensitive Area" (ESA), per policy 9-C(a). This section of Laguna Canyon Creek is entirely channelized and lacks significant habitat value within the creek bed and is not in a natural state. policy 8-J requires detailed biological assessments for all development proposed in ESAs and requires uses within the ESA to be dependent upon the resource. Because the creek bed itself does not contain habitat value, the County preformed an inventory and assessment of trees surrounding the creek in the project location.

*No. 2. Any development located between the sea and the first public road paralleling the sea is in conformity with the certified local coastal program and with the public access and public recreation policies of Chapter 3 of the Coastal Act.*

The project site is not located between the sea and the first public road paralleling the sea. This review finding is not applicable.

*No. 3. The proposed development will not have any significant adverse impacts on the environment within the meaning of the California Environmental Quality Act.*

Pursuant to the California Environmental Quality Act (CEQA), a MND has been adopted by the County in May 2013 (SCH# 2012111011). In addition, the proposed project is exempt from CEQA under the Class 2 categorical exemption in that the existing channel would be replaced in-kind, no expansion to capacity, and located in the same area.

<u>Public Correspondence</u>
Staff received emails from two different individuals, and the County has provided responses to address the public's comments, both of which are attached as Exhibit C in this staff report.

California Environmental Quality Act (CEQA) Determination

Environmental review for a County-Wide Long-Term Routine Maintenance Permitting Program, which included the Laguna Canyon Channel Replacement Project, consisted of preparation of an Initial Study (IS), certification of a Mitigated Negative Declaration (MND) and adoption of a Mitigation and Monitoring Plan/Program by the County in May 2013. Pursuant to the California Environmental Quality Act (CEQA), a MND has been adopted (SCH# 2012111011).

Additionally, pursuant to CEQA Guidelines, Section 15302 (Replacement or Reconstruction), staff recommends that the Planning Commission determine that the proposed project is exempt from CEQA under the Class 2 categorical exemption in that the existing channel would be replaced in-kind, no expansion to capacity, and located in the same area.

**RECOMMENDATION:** Staff recommends that the Planning Commission approve Design Review 22-0735 and Coastal Development Permit 22-0736, subject to the discussion provided in the staff report and the findings in the attached Resolution.

**ATTACHMENTS:** Exhibit A: Concept Review Response to Comments
Exhibit B: Project Plans
Exhibit C: Public Correspondence and Response to Comments
Exhibit D: August 4, 2021, PC Meeting Minutes
Resolution

# Planning Commission Concept Review Response to Comments

**Laguna Canyon Channel (I02) Replacement Project**

**August 4, 2021**

| Item No. | Comment | Issuer | Response |
|---|---|---|---|
| 1 | Will the channel be replaced from the west end of the Laguna Canyon Frontage Road to Woodland Drive or is it just the collapsed area? | Planning Commission | The channel will be replaced from upstream of Laguna Canyon Frontage Road to downstream of Woodland Drive. |
| 2 | The trees that did the damage were removed right away; are the rest of the mature trees along that stretch going to be removed as well? | Planning Commission | Along the west side of the channel, a total of 7 trees (2 California Sycamore's and 5 Aleppo Pines) will be removed. We explored multiple options to save the trees between the channel and Laguna Canyon Road. OCPW hired an arborist and they determined "the only way to prevent the risk of root encroachment along the wall would be a full tree removal." OCPW also hired an engineer to perform a structural evaluation of the channel wall. They determined the tree roots applied "very large lateral pressures against the walls" which was "very detrimental to the wall and likely led to the collapse". In order to construct the channel, a shoring system approximately 4 feet behind the existing channel wall is required. With the recommendations from the arborist, engineer, and to safely install the shoring, the trees must be removed between Laguna Canyon Road and the channel.<br><br>In the Frontage Road Mini Park, 3 California Sycamores are to be pruned and protected in place and 1 California Sycamore which is within 6 feet from the channel wall will be removed and replaced with a new tree planted 10' away form the channel. |

| | | | |
|---|---|---|---|
| 3 | Has there been any discussions for creating a couple locations for public art? | Planning Commission | Per coordination with the City, "the City's Arts Commission has reviewed the project site for inclusion of public art and has determined that the area has sufficient public art and any more would be noisy and detract. Landscaping in the project limits would complement the existing public art." |
| 4 | Is the January 2022 to May 2022 timeline realistic? | Planning Commission | Due to the City's moratorium during the summer Sawdust Festival, the project construction dates have been updated. Construction will commence after the summer festival and is expected to last for 6 months. |
| 5 | Are you going to demolish the whole stretch of channel at one time or will it be done in phases? | Planning Commission | The demolition and construction of the channel will be divided into 3 zones. This will minimize the impact to the community and parking by having approximately 2/3 of the parking along Laguna Canyon Frontage Road remain open during construction. |
| 6 | During a rain event, what mitigation do we have to hold up the banks on either side? | Planning Commission | Construction of the channel will occur in sections. After the existing channel is demolished in each section, the earth on either side of the channel will be supported by a shield shoring system. OCFCD has experience working during storm events and will monitor storm events to ensure that the facility is protected. |
| 7 | What existed before there was a concrete channel? | Planning Commission | Prior to construction of the concrete lined channel, there existed a natural creek that meandered along Laguna Canyon Road. |
| 8 | Is there a possibility of creating a more natural channel? | Planning Commission | Replacing the existing channel with a natural channel is not feasible at this time as the channel is under sized. A natural channel would not be viable with the high velocity and flow expected. However, in the future, the plan is to provide a secondary storm drain system under Laguna Canyon Road. At that time, studies can be completed to explore this option. |

| | | | |
|---|---|---|---|
| 9 | What is the purpose of adding a bridge closest to Woodland Drive? | Planning Commission | This Project provides an opportunity to enhance pedestrian safety by modifying the circulation within the area. The pedestrian bridge/crossing closest to Woodland Drive is functionally obsolete meaning it does not meet current design standards. An ADA complaint path along Woodland Drive will be installed to access the existing sidewalk along the Frontage Road. If the bridge/crossing was replaced in the same location, 4 to 6 parking spots would need to be eliminated to provide an ADA compliant pathway across the Frontage Road. This would conflict with the City's desire to preserve parking within the community. |
| 10 | Is there a considerable expense to relocating the bridge closest to Woodland Drive? | Planning Commission | There is not a considerable expense to relocating the bridge closest to Woodland Drive as the bridge would have to be demolished and re-built in either scenario. Relocating the bridge provides the benefit of providing an ADA complaint path of travel along Woodland Drive that enhances safety for pedestrians and will avoid removing 4-6 parking spots in front of the existing bridges to make a ADA complaint path across the Frontage Road. |
| 11 | Can the path leave the curb and meander between Laguna Canyon Road and the channel in certain locations? | Planning commission | During the design process, it was determined that providing a straight sidewalk was the most feasible for this site due to grading challenges. If a meandering path was implemented, a retaining wall or the left side channel wall height would need to be increased. OCFCD would not be able to do this because it would change the flooding behavior at this location and have a negative impact as compared to the existing condition. |
| 12 | How can we implement trees between the channel and Laguna Canyon Road? Are there alternatives features that can be implemented to provide shade (i.e. root barriers)? | Planning commission | OCPW proposes small street trees within decomposed granite (DG) tree wells at the back of the curb along Laguna Canyon Road. With this approach, OCPW will install 7 new trees along Laguna Canyon Road and ensure that trees are at least 10’ from the channel. This is the most feasible option considering the numerous existing underground utilities. This option will be reviewed by Caltrans and is subject to their approval. |

| | | | |
|---|---|---|---|
| 13 | Is it possible to create drawings and determine the cost of upgrading the channel to add a lid in the future? | Planning commission | City Council directed City staff to not pursue the channel covering. However, OCPW requested the engineer of record to check if the channel would be conducive of a future covering. The engineer determined that, based on current design standards, the channel would be conducive of a covering. |
| 14 | There is a big gap between bridge #2 and the proposed bridge at Woodland Drive. Is it possible to construct another bridge closer to the Boys and Girls club, even if it requires eliminating a couple of parking spots? | Planning commission | It is feasible to construct the bridge closer to the Boys and Girls Club. This would require hydraulic analysis to ensure that the bridge does not change the current capacity of the channel, removing 4 to 6 parking spots, and extensive civil work outside the limits of the Project, and additional cost to the City. The purpose of this Project is to urgently replace the channel to maintain the flood protection to the community and this enhancement can be pursued post Project completion. |
| 15 | Isn't PCH a Caltrans highway with many trees within 30' of both sides of PCH? Why can we plant trees there, but not along Laguna Canyon Road? | Planning Commission | Although PCH may have trees within 30' of the edge of traveled way, this project must follow the Caltrans requirements for new trees within their right-of-way. The Caltrans Highway Design Manual Topic 901 denotes the requirements for installing trees within the Caltrans right-of-way. Caltrans defines large trees to have a trunk greater than 4" in diameter. They specify that large tress can be planted for speeds 35 mph and under if the tree is at least 18" from the curb face. They also specify for speeds 40 mph and greater that the trees are a minimum of 18" from curb face and be 30' minimum from edge of traveled way. Certain species might require additional distance from the edge of traveled way. OCPW is proposing installing small trees within DG tree wells at the back of the curb and will submit the design to Caltrans for their review and approval. Although the incorporation of trees on Laguna Canyon Road is subject to Caltrans approval, OCPW understands the importance of the trees to the community and will continue to coordinate the tree layout and species with Caltrans to find a resolution. |

| | | | |
|---|---|---|---|
| 16 | Are all the trees that were planted as part of the Village Entrance 30' from the travelled way? How did we get around it on that project? | Planning Commission | The Village Entrance has a larger distance from the edge of traveled roadway to the channel. Also, the speed limit within this section is 35 mph which allows large trees to be planted within 30 feet from the edge of traveled way. |
| 17 | Landscape and Scenic Highways Element and the Landscape and Scenic Highways Resource Document describes that trees such as California Sycamore, Live Oak and other native species among the existing pines be planted in the area from Canyon Acres to Frontage Road. | Public | OCPW has reviewed the Landscape and Scenic Highways Element and the Landscape and Scenic Highways Resource Document, and will work with the City arborist, and coordinate with Caltrans to understand which tree species would be acceptable to all parties in this location. |
| 18 | Arborist did not recommend existing mature trees be removed. Report notes that none of the first 6 trees located along Laguna Canyon Road have an elevated risk of total failure into the channel. Keep those trees while protecting the channel with root barriers. Plans show a shoring section of steel plates of 1'4" wide that should protect the channel from roots. | Public | OCPW explored multiple options to save the trees between the channel and Laguna Canyon Road. OCPW hired an arborist and they determined “the only way to prevent the risk of root encroachment along the wall would be a full tree removal.” OCPW also hired an engineer to perform a structural evaluation of the channel wall. They determined the tree roots applied “very large lateral pressures against the walls” which was “very detrimental to the wall and likely led to the collapse”. In order to construct the channel, a shoring system approximately 4 feet behind the existing channel wall is required. With the recommendations from the arborist, engineer, and to safely install the shoring, the trees must be removed between Laguna Canyon Road and the channel. |
| 19 | The walk along this area will be less pleasant without the existing large trees. | Public | OCPW proposes installing small trees within DG tree wells at the back of the curb and will submit the design to Caltrans for their review and approval. Although the incorporation of trees on Laguna Canyon Road is subject to Caltrans approval, OCPW understands the importance of the trees to the community and will continue to coordinate the tree layout and species with Caltrans to find a resolution. |

| | | | |
|---|---|---|---|
| 20 | Can articulated concrete block be used for the channel walls intermittently to enhance riparian habitat? Riparian plantings can be used. | Public | Replacing the existing channel with an articulated concrete block wall is not feasible at this time as the channel is under sized. An articulated concrete block wall would not be viable with the high velocity and flow expected. However, in the future, the plan is to provide a secondary storm drain system under Laguna Canyon Road. At that time, studies can be completed to explore this option. |
| 21 | The bottom of the existing bridges is below the top of the channel. This causes flooding of the bridges. Pedestrian bridges need to be raised such that the bottom of the bridge is above the channel such that they do not flood when the channel is full. | Public | The proposed pedestrian bridges have been designed to be as high as the site constraints allow. The pedestrian bridges will not flood if a flow less than the design flow is present. However, when the channel conveys storms that exceed design capacity, it is expected that flooding will occur. |
| 22 | Consider special parking arrangements for residents when parking along Laguna Canyon Frontage Road during construction. Complete an additional analysis to make sure that there is enough parking if 1/3 of it is removed. | Public | OCPW coordinated with the City to minimize the impacts to parking as much as feasible . Unfortunately, with the constrained site conditions parking will be impacted. After careful consideration OCPW along with support from the City determined that impacting approximately 1/3 of the parking was the minimum amount of parking feasible. |
| 23 | At the mini park, two trees are about 8' to 9' away from the channel, one is about 16' from the channel, the other one is about 6' from the channel. Perhaps the tree that is 6' away needs to be removed, but hopefully the others can remain. | Public | In the existing condition, there are four California Sycamore trees within the Mini Park. The northernmost tree adjacent to Woodland Drive will be removed due to its proximity to the channel and replaced with a new California Sycamore tree located 10’ away from the channel. After an arborist analyzed the trees, they determined the other trees pose a minimal risk to the channel and are in good health. The three trees within the Mini Park will be pruned and protected in place. |
| 24 | County is going to use the original mini park drawings to put park back in the original configuration. Recommend that preconstruction photos be taken because there was some detailed work that was not on the plans (i.e. rock and borders around landscape). | Public | OCPW will work with the contractor to ensure pre-construction photos are taken. The contractor will use the photos and the Mini Park record drawings to reconstruct the Frontage Road Mini Park. |

| | | | |
|---|---|---|---|
| 25 | Can smaller trees be installed in place of the existing pine trees that have to be removed? | Public | OCPW proposes installing small trees within DG tree wells at the back of the curb and will submit the design to Caltrans for their review and approval. Although the incorporation of trees on Laguna Canyon Road is subject to Caltrans approval, OCPW understands the importance of the trees to the community and will continue to coordinate the tree layout and species with Caltrans to find a resolution. |
| 26 | It might be a misconception that Caltrans does not allow trees on PCH because they are currently being planted. | Public | Although PCH may have trees within 30' of the edge of traveled way, this project must follow the Caltrans requirements for new trees within their right-of-way. The Caltrans Highway Design Manual Topic 901 denotes the requirements for installing trees within the Caltrans right-of-way. Caltrans defines large trees to have a trunk greater than 4" in diameter. They specify that large tress can be planted for speeds 35 mph and under if the tree is at least 18" from the curb face. They also specify for speeds 40 mph and greater that the trees are a minimum of 18" from curb face and be 30' minimum from edge of traveled way. Certain species might require additional distance from the edge of traveled way. OCPW is proposing installing small trees within DG tree wells at the back of the curb and will submit the design to Caltrans for their review and approval. Although the incorporation of trees on Laguna Canyon Road is subject to Caltrans approval, OCPW understands the importance of the trees to the community and will continue to coordinate the tree layout and species with Caltrans to find a resolution. |
| 27 | If there is a curb adjacent sidewalk, suggestion is to consider asphalt. Asphalt is less urban and more of a transition to the canyon. | Public | City Council directed City staff to pursue a colored concrete sidewalk similar to the Village Entrance Project and OCPW will follow City Council's directive. |

ORANGE COUNTY OC Public Works

April 20, 2022

City of Laguna Beach
Community Development Department
505 Forest Avenue
Laguna Beach, California 92651
Attn: Arlen Beck, Associate Planner

Subject: Laguna Canyon Channel Replacement Project Planning Commission Design Review Package

Greetings Arlen,

Orange County Public Works (OCPW) on behalf of Orange County Flood Control District (OCFCD) is replacing approximately 1,200 feet of Laguna Canyon Channel (Channel), OCFCD Facility No. I02, from upstream of Laguna Canyon Frontage Road to downstream of Woodland Drive. The Laguna Canyon Channel Replacement Project (Project) consists of removing and replacing the rectangular concrete channel, reconfiguring small concrete pedestrian crossings, removing and replacing softscape and hardscape that may be damaged or removed in order to construct the Project, and removing and replanting trees adjacent to the Project Limits that pose a risk to the Channel.

During heavy storms in February 2019, approximately 265 feet of the left side Channel wall failed and collapsed. An investigation determined the primary contributor to the failure was the adjacent mature trees and that an emergency repair was needed to maintain flood protection to the community. In March 2019, a temporary repair was implemented to fix the collapsed wall, remove the majority of the adjacent trees and install bracing to prevent additional failures. The Project will replace the temporary repairs with a permanent solution for the Channel.

OCPW is requesting the City of Laguna Beach (City) Community Development Department to submit the attached Project Package for the Design Review by the Planning Commission. The Package consists of a written technical letter, which describes the landscape concept, design alternatives, pedestrian crossings, and construction phasing. Attached to the letter are exhibits which complement the text and provide graphics to assist the Planning Commission's review.

OCPW is requesting the City Community Development Department to add this Package as an agenda item to the May 18th, 2022 Planning Commission Meeting for Design Review. Your continued partnership and support to implement this urgent Project is much appreciated.

Should you have any questions, please contact me at 714-667-9693 or andrea.echeverria@ocpw.ocgov.com.

Sincerely,

Andrea Echeverria, P.E.
Orange County Public Works
OC Infrastructure Programs/Project Management

Attachments: Laguna Canyon Channel Replacement Project Planning Commission Design Review Package

## Contents

1. Channel Replacement ..... 3
2. Landscape Design ..... 3
3. Trees ..... 4
4. Frontage Road Mini Park ..... 5
5. Design Enhancements ..... 5
   5.A Channel Fencing ..... 5
   5.B Laguna Canyon Road Sidewalk ..... 6
6. Pedestrian Circulation ..... 6
7. Phasing Description for Construction ..... 7

Attachment "A" – Plans for the Replacement of Laguna Canyon Channel OCFCD Facility No. I02

Attachment "B" – Landscape Concept Plan (Exhibit L1)

Attachment "C" – Proposed Pedestrian Crossings – Concept Plan (Exhibit D1)

Attachment "D" – Overall Project Construction Phasing – Concept Plan (Exhibit C1)

Construction Phasing / Traffic Control (Phase 1 of 3) – Concept Plan (Exhibit C2)

Construction Phasing / Traffic Control (Phase 2 of 3) – Concept Plan (Exhibit C3)

Construction Phasing / Traffic Control (Phase 3 of 3) – Concept Plan (Exhibit C4)

Pedestrian Detouring During Construction – Channel Typical Section (Exhibit C5)

Attachment "E" – Project Rendering

Attachment "F" – Arborist Reports

Attachment "G" – Structural Evaluation of Laguna Canyon Channel

Attachment "H" – Tree Removal Plan (Exhibit L2)

## 1. Channel Replacement

Orange County Flood Control District (OCFCD) built the Channel in 1958 and has been maintaining it ever since. During heavy storms in February 2019, approximately 265 feet of the left side channel wall failed and collapsed. An investigation determined an emergency repair was needed to maintain flood protection to the community. In March 2019, a temporary repair was implemented to fix the collapsed wall and remove the majority of the adjacent trees. The channel wall showed evidence of significant tilt outside of the collapse area and bracing was installed to prevent additional failures. In November 2021, OCPW installed additional bracing between the pedestrian crossing closest to the entrance of the Laguna Canyon Frontage Road and the crossing in front of the Sawdust Art Festival to mitigate additional wall tilt. Although the channel adjacent to the Laguna Canyon Frontage Road Mini Park was not braced, the wall tilt in that section is above what is considered allowable. Therefore, the Project will replace the channel between Laguna Canyon Frontage Road and Woodland Drive with a permanent solution.

Since this is a replacement project to maintain the current flood protection, the original geometry will be maintained. Any channel enhancements or modifications are not feasible at this time as the channel is under sized. To upgrade this channel and convey 100-year flows, a secondary storm drain system is needed under Laguna Canyon Road in the future. At that time, studies can be completed to explore enhancement options to the existing channel.

## 2. Landscape Design

In order to implement the Laguna Canyon Channel Replacement Project, much of the existing landscaping must be removed and reestablished throughout the Project area. The intent of the landscape design is to provide a quality, cost-effective, functional, and visually appealing landscape program that will enhance the area consistent with other projects within the Laguna Canyon Road corridor. The plant palette will be an extension of what was utilized at the Laguna Beach Village Entrance project which incorporated low water-use and California native plants. In addition, a few plants that are unique to the area around the Sawdust Art Festival will be employed in the design. The landscape theme also incorporates rock cobble and boulders to add texture and a variety of materials to the design. The landscape design lengthens the aesthetic of the Village Entrance, expanding the gateway arrival experience into Laguna Beach, while also creating an inviting entrance to the Sawdust Art Festival area for both pedestrians and motorists along Laguna Canyon Road. See Attachment B for the Landscape Concept Plan and Attachment E for a rendering of the proposed improvements along Laguna Canyon Road.

The existing Arts District Sign located at the southern entrance of Laguna Canyon Frontage Road will be salvaged and reinstalled in the same location after the channel construction. The City's Art Commission has reviewed the Project site for inclusion of public art and has determined that the area has sufficient public art.

The existing bus stop art bench and wooden shade structure will be protected-in-place.

The existing art bike racks located north of the bus stop will be salvaged and reinstalled in the same location after the channel construction.

The existing OCTA bus stop bench will be salvaged and reinstalled in the same location.

## 3. Trees

OCPW explored multiple options to protect the existing trees between the channel and Laguna Canyon Road. OCPW hired an arborist and they determined that "the only way to prevent the risk of root encroachment along the wall would be a full tree removal." OCPW also hired an engineer to perform a structural evaluation of the channel wall. They determined the tree roots applied "very large lateral pressures against the walls" which was "very detrimental to the wall and likely led to the collapse". To protect the Channel and maintain current flood control protection, OCPW must remove the remaining trees. In order to construct the channel, a shoring system approximately 4 feet behind the existing channel wall is required. With an average tree distance of 5.5 feet from the channel wall, all the trees must be removed to safely install the shoring. Following the recommendations from the arborist, engineer, and to safely install the shoring, the trees will be removed between Laguna Canyon Road and the Channel.

This project must follow the Caltrans requirements for new trees within their right-of-way. The Caltrans Highway Design Manual Topic 901 denotes the requirements for installing trees within the Caltrans right-of-way. Caltrans defines large trees to have a trunk greater than 4" in diameter. They specify that large tress can be planted for speeds 35 mph and under if the tree is at least 18" from the curb face. They also specify for speeds 40 mph and greater that the trees are a minimum of 18" from curb face and 30' minimum from edge of traveled way. Certain species might require additional distance from the edge of traveled way. After receiving comments from the City's Planning Commission, City Staff, and the public, OCPW incorporated small new street trees within decomposed granite (DG) tree wells at the back of the curb along Laguna Canyon Road into the Project plans. Since the Laguna Canyon Road speed limit is 45 mph, this approach provides the opportunity to install seven new small trees along Laguna Canyon Road, ensures that trees are at least 10' from the channel to align with OCFCD policies, and is the most feasible option considering numerous existing underground utilities. Although the incorporation of trees on Laguna Canyon Road is subject to Caltrans approval, OCPW understands the importance of the trees to the community and will continue to coordinate the tree layout and species with the City of Laguna Beach and Caltrans to find a resolution.

To align with the Caltrans Plant Setback and Spacing Guide, OCPW is presenting the following small trees for the Planning Commission's review and selection:

- Catalina Cherry (Prunus Lyonia)
- Hollyleaf Cherry (Prunus Ilicifolia)
- Toyon (Heteromeles Arbutifolia)
- Western Redbud (Cercis occidentalis)

On the east side of the channel, within the Mini Park, there are four existing California Sycamore trees. OCPW hired an arborist to assess the trees and the northernmost tree adjacent to Woodland Drive is approximately 6 feet from the channel and poses a high risk of root encroachment on the channel wall. The arborist determined "there is significant surface root development and several large roots growing in the direction of the channel" which led them to determine the risk of "affecting the channel wall in the future" as "moderate [1 to 5 years] to high [10+ years]". They recommended that based "on the pattern of root development, the proximity to the channel wall, and the likelihood of construction impacts, this tree should be considered for removal". To maintain flood control protection, OCPW will remove the tree and plant a new tree at least ten feet from the channel wall with root barriers. The other three trees within the Mini Park will be pruned and protected in place with root barriers installed to help guide root growth away from the channel.

The arborist reports prepared by West Coast Arborists are provided in Attachment F, the structural report prepared by HDR is provided in Attachment G, and the Tree Removal Plan (Exhibit L2) is provided in Attachment H.

## 4. Frontage Road Mini Park

Unfortunately, the channel adjacent to the Frontage Road Mini Park cannot be accessed along Laguna Canyon Road due to high voltage overhead SoCal Edison distribution power lines. Thus the existing Frontage Road Mini Park will be used for construction access and will be impacted. Benches and trash receptacles will be salvaged and reinstalled. The rock curb, boulders, decomposed granite, planting, and irrigation will be replaced as part of this Project. OCPW will take pictures and direct the Contractor to use those along the Frontage Road Mini Park record drawings to reconstruct the park.

## 5. Design Enhancements

On April 6, 2021, City Council directed City staff to pursue enhanced aesthetics improvements similar to the Village Entrance Project and return to City Council with the cooperative agreement to implement and fund the improvements. The following describes the enhanced design features that will be installed on the Project:

### 5.A Channel Fencing

A 5-foot-tall tubular steel fence with concrete posts similar to the Laguna Beach Village Entrance channel fence will be installed upon execution of a cooperative agreement detailing that the City will fund and maintain the decorative fence. The incremental cost difference between the upgraded fence vs. OCFCD standard chain link fencing will be the City's funding responsibility.

### 5.B Laguna Canyon Road Sidewalk

New integrally colored and textured concrete sidewalk similar to the Laguna Beach Village Entrance will be installed. The incremental cost difference between the colored concrete vs. AC pavement will be funded by the City through a cooperative agreement.

## 6. Pedestrian Circulation

Currently, there are three existing 16 ft. wide reinforced concrete box (RCB) pedestrian crossings originally built in 1958 to provide access to private parcels from Laguna Canyon Road. As Laguna Canyon Frontage Road and the surrounding areas were developed over time, the purpose of the crossings changed and now are used as pedestrian access to business, residents, the Boys and Girls Club, and the Sawdust Art Festival. The first RCB crossing closest to the entrance of the Laguna Canyon Frontage Road and third crossing closest to Woodland Drive currently direct pedestrian traffic directly into the Laguna Canyon Frontage Road parking area. Due to the absence of crosswalks, pedestrians do not have a dedicated Americans with Disabilities Act (ADA) compliant path at these locations to cross Laguna Canyon Frontage Road and must either cross between parked vehicles and traverse across Laguna Canyon Frontage Road, or walk along the parked vehicles and the Laguna Canyon Frontage Road to the existing crosswalks in front of the Sawdust Art Festival or the Laguna Canyon Frontage Road entrance. Without delineated crosswalks and ADA access at those locations, the RCBs are functionally obsolete and the Project presents the opportunity to improve the pedestrian routing throughout the area. The proposed improvements are detailed as follows:

1. Remove the first RCB crossing since the crossing with a crosswalk is located 250 ft. to the north and access is available at the entrance of the Laguna Canyon Frontage Road located 85 feet to the south. The removal of this RCB will enhance pedestrian safety and create a more controlled pedestrian route to the adjacent businesses.
2. Remove the existing middle RCB crossing and construct a wider 22 ft. RCB (20 ft. wide pedestrian area) in the same location of the existing crossing located in front of the Sawdust Art Festival. The widened crossing requested by City staff will help alleviate congestion and will maintain the pedestrian path from the City's trolley stop to the Sawdust Art Festival by utilizing the existing crosswalk location.
3. Relocate the third RCB crossing to Woodland Drive to provide a safe new path to the existing sidewalk along Laguna Canyon Frontage Road. Woodland Drive currently lacks

a pedestrian path and the proposed relocation would add ADA access along Woodland Drive from Laguna Canyon Road to the Laguna Canyon Frontage Road.

The two proposed RCB crossings will receive integrally colored and textured concrete surfaces and also an aesthetic railing system, similar to the Laguna Beach Village Entrance. These enhancements for the proposed crossings will be funded and maintained by the City through a cooperative agreement.

The modified pedestrian access is shown in Attachment C.

If the crossings were replaced in their current location, the first and third crossing would require extensive civil work to make the crossings ADA compliant. That would involve removing approximately 4-6 parking stalls for each crossing. This would have a negative impact on the local businesses and residential permitted parking.

The existing asphalt sidewalk will be replaced with an ADA compliant colored concrete sidewalk in its current location. During the design process, it was determined that providing a straight sidewalk was the most feasible for this site due to grading challenges. If a meandering path was implemented, a retaining wall would need to be installed or the left side channel wall height would need to be increased to account for the change in elevation. OCPW would not be able to implement this because it would change the flooding behavior at this location and have a negative impact to local flooding as compared to the existing condition.

## 7. Phasing Description for Construction

To minimize the construction footprint, construction is planned to occur in three phases.

The Project phases have been identified and labeled as work zones numbers 1 through 3. Work Zone 1 includes the first third of the Project from the beginning of Project at Laguna Canyon Frontage Road to about 350 feet upstream. Work Zone 2 will include the middle section of the channel from the end of Work Zone 1 to approximately 600 feet upstream. Work Zone 3 includes the end of Work Zone 2 to the end of the Project at Woodland Drive.

General traffic circulation will remain unhindered during construction with impacts to parking minimized to the greatest extent possible. Parking between Laguna Canyon Frontage Road and Woodland Drive along Laguna Canyon Road will be closed for the full duration of the Project to provide a consistent pedestrian detour. The two northbound travel lanes will remain open for the duration of construction along Laguna Canyon Road. At each work zone, the parking along Laguna Canyon Frontage Road will be closed and lane width reduced to facilitate the work area. Water barriers with screen fencing will be used to reduce the visual impacts of construction, provide site security, and maintain a safe construction site. In general, while construction is active in one work zone, parking along the Laguna Canyon Frontage Road in the other two work zones will remain open to the greatest extent possible.

The pedestrian detour along Laguna Canyon Road will occur within the on-street parking lane. Concrete k-rails will be used to protect pedestrians from vehicular traffic with screened fencing between the pedestrian path and the work area to secure the Project site and to reduce visual impacts. Periodic openings in the K-rail will occur at each work zone with proper delineators, crash barriers, and flaggers (when necessary) to provide equipment access to the site. Temporary ADA compliant ramps will be installed to ensure the path is ADA accessible. Since the existing sidewalk along Laguna Canyon Road will be closed and parking eliminated for the duration of construction, the three pedestrian crossings will be closed during construction. To maintain access to the existing sidewalk along the Laguna Canyon Frontage Road during construction, a temporary pathway will be provided along Woodland Drive adjacent to the site with water barriers to protect pedestrians from vehicles and screened fencing. Temporary striping will be used to delineate the lane reductions during construction.

Each work zone is shown in Attachment D along with the construction area, temporary K-rail, temporary chain link fence with screening, and temporary water barriers with screening.

# Attachment A

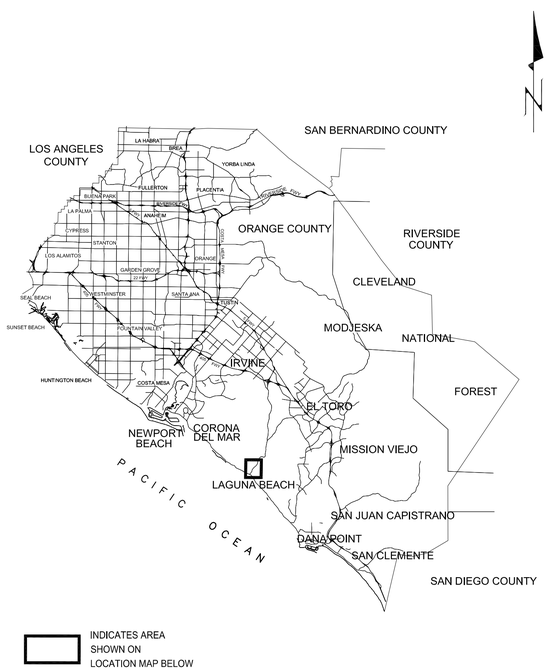


**VICINITY MAP**
NOT TO SCALE

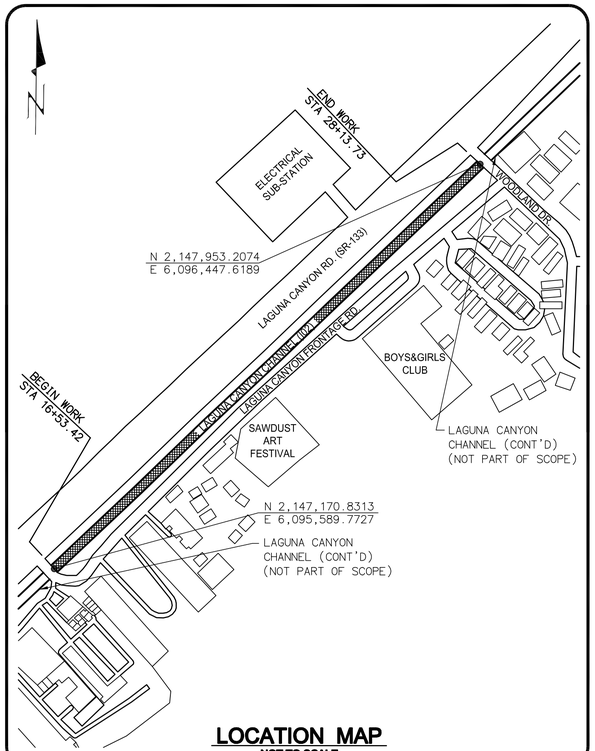


**LOCATION MAP**
NOT TO SCALE

# County of Orange

OC PublicWorks

SANTA ANA, CALIFORNIA

JAMES TREADAWAY, P.E., S.E., DIRECTOR

# PLANS FOR THE REPLACEMENT OF LAGUNA CANYON CHANNEL OCFCD FACILITY No. I02

**FROM**
**U/S LAGUNA CANYON FRONTAGE ROAD**
**STA. 16+53**
**TO**
**D/S WOODLAND DRIVE**
**STA. 28+13**

## MARCH 2022
## 95% SUBMITTAL

**FUNDED AND MAINTAINED BY:**
**ORANGE COUNTY FLOOD CONTROL DISTRICT**
**AND CITY OF LAGUNA BEACH PER COOPERATIVE AGREEMENT # TBD**

## INDEX OF SHEETS


| SHEET NO. | DESCRIPTION |
|---|---|
| 1. | COVER PAGE |
| 2. | NOTES |
| 3. | DEMOLITION PLAN – SHEET 1 |
| 4. | DEMOLITION PLAN – SHEET 2 |
| 5. | DEMOLITION PLAN – SHEET 3 |
| 6. | DEMOLITION PLAN – SHEET 4 |
| 7. | PROPOSED CHANNEL PLAN / PROFILE STA: 15+70 TO 18+00 |
| 8. | PROPOSED CHANNEL PLAN / PROFILE STA: 18+00 TO 20+00 |
| 9. | PROPOSED CHANNEL PLAN / PROFILE STA: 20+00 TO 22+00 |
| 10. | PROPOSED CHANNEL PLAN / PROFILE STA: 22+00 TO 24+00 |
| 11. | PROPOSED CHANNEL PLAN / PROFILE STA: 24+00 TO 26+00 |
| 12. | PROPOSED CHANNEL PLAN / PROFILE STA: 26+00 TO 27+50 |
| 13. | PROPOSED CHANNEL PLAN / PROFILE STA: 27+50 TO 29+00 |
| 14. | ADA COMPLIANT RAMP DETAILS |
| 15. | ADA COMPLIANT RAMP & LIGHT POST DETAILS |
| 16. | CROSS–SECTION DETAILS |
| 17. | RECTANGULAR CHANNEL – TYPICAL SECTION |
| 18. | RCB– TYPICAL SECTION |
| 19. | BARRIER / RAILING – PLAN, SECTIONS AND DETAILS |
| 20. | MISCELLANEOUS DETAILS |
| 21. | RAILING DETAILS |
| 22. | PLANTING PLAN – SHEET 1 |
| 23. | PLANTING PLAN – SHEET 2 |
| 24. | PLANTING PLAN – SHEET 3 |
| 25. | PLANTING NOTES, AND DETAILS – SHEET 1 |
| 26. | PLANTING NOTES, AND DETAILS – SHEET 2 |
| 27. | IRRIGATION PLAN – SHEET 1 |
| 28. | IRRIGATION PLAN – SHEET 2 |
| 29. | IRRIGATION PLAN – SHEET 3 |
| 30. | IRRIGATION NOTES |
| 31. | IRRIGATION DETAILS – SHEET 1 |
| 32. | IRRIGATION DETAILS – SHEET 2 |
| 33. | SIGNING AND STRIPING PLAN–SHEET 1 |
| 34. | SIGNING AND STRIPING PLAN–SHEET 2 |
| 35. | TRAFFIC CONTROL PLAN NOTES AND LEGEND |
| 36. | TRAFFIC CONTROL PLAN – CONSTRUCTION PHASE 1 |
| 37. | TRAFFIC CONTROL PLAN – CONSTRUCTION PHASE 2 |
| 38. | TRAFFIC CONTROL PLAN – CONSTRUCTION PHASE 3 |
| 39. | EROSION AND SEDIMENT CONTROL – SHEET 1 |
| 40. | EROSION AND SEDIMENT CONTROL – SHEET 2 |
| 41. | EROSION AND SEDIMENT CONTROL – SHEET 3 |


| UTILITY OWNER | CONTACT | PHONE NO. |
|---|---|---|
| CITY OF LAGUNA BEACH | MARK TRESTIK | (949) 497–0300 |
| CITY OF LAGUNA BEACH | HANNAH JOHNSON | (949) 464–6615 |
| LAGUNA BEACH COUNTY WATER DISTRICT | BOBBY YOUNG | (949) 342–1440 |
| SOUTHERN CALIFORNIA GAS | EDUARDO CORTES | (213) 231–5427 |
| SOUTHERN CALIFORNIA EDISON | STEVE HOFFMAN | (949) 383–6586 |
| COX COMMUNICATIONS | FRANK AGUILAR | (949) 279–5404 |
| FRONTIER COMMUNICATIONS | MIKE MADRID | (714) 469–9401 |

### BENCHMARK:

THE ELEVATIONS SHOWN HEREON ARE BASED UPON THE COUNTY OF ORANGE BENCHMARK

O.C.S. BM. 1E–71–69
ELEV. = 197.808'

YEAR: LEVELED 1988, ADJUSTED 1995

NAVD 1988

### BASIS OF BEARINGS:

THE BEARINGS FOR THIS SURVEY IS BASED ON THE CALIFORNIA COORDINATE SYSTEM (CCS83), ZONE VI, NAD 83, OCS (2007.00) EPOCH ADJUSTMENT, AS DETERMINED LOCALLY BY A LINE BETWEEN CONTINUOUS GLOBAL POSITIONING STATIONS CGPS (WHYT) AND (SBCC) BEING NORTH 07°50'54" EAST AS DERIVED FROM THE COORDINATES PUBLISHED BY THE CALIFORNIA SPATIAL REFERENCE CENTER (CSRC) ALONG WITH DATA SHEETS ON FILE IN THE OFFICE OF THE ORANGE COUNTY SURVEYOR.

### DEVIATIONS

OCFCD DESIGN MANUAL STATES THAT OPEN CHANNELS WITH A V–TYPE CROSS SLOPE SHALL HAVE A SLOPE EQUAL TO ¾ INCH / FOOT. THE PROPOSED CHANNEL CROSS–SLOPE WILL MATCH THE EXISTING CHANNEL CROSS–SLOPE OF 2 INCH / FOOT.

APPROVED: _____
KEVIN ONUMA, P.E. — DATE
CHIEF ENGINEER
ORANGE COUNTY FLOOD CONTROL DISTRICT

### CITY OF LAGUNA BEACH

APPROVED: _____
MARK TRESTIK, P.E. — DATE
CITY ENGINEER
CITY OF LAGUNA BEACH

### COUNTY OF ORANGE PUBLIC WORKS DEPARTMENT

RECOMMENDED BY: _____
NARDY KHAN, P.E., P.M.P. — DATE
DEPUTY DIRECTOR
OC INFRASTRUCTURE PROGRAMS

APPROVED: _____
KEVIN ONUMA, P.E. — DATE
CHIEF ENGINEER
ORANGE COUNTY FLOOD CONTROL DISTRICT

### RECORD DRAWING

CONTRACTOR: _____
RESIDENT ENGINEER: _____
INSPECTOR: _____
START DATE: _____
COMPLETION DATE: _____

### PREPARED BY

PREPARED UNDER RESPONSIBLE CHARGE OF:

_____
BRADLEY R. MIELKE, P.E., S.E. — DATE
MICHAEL BAKER INTERNATIONAL

| NO. | DESCRIPTION | SHT. | APPROVED | DATE |
|---|---|---|---|---|
| | | | | |

REVISIONS

W. O. NO. EE20400C
DWG. NO. I02-101-X-X

**SHEET 1 OF 41**

REPLACEMENT OF LAGUNA CANYON CHANNEL OCFCD FACILITY No. I02

## GENERAL NOTES:

1. CONTRACTOR PERFORMING WORK ON THIS PROJECT SHALL BECOME FAMILIAR WITH THIS SITE AND SHALL BE SOLELY RESPONSIBLE FOR ANY DAMAGE TO EXISTING FACILITIES RESULTING FROM THEIR CONSTRUCTION OPERATIONS UNLESS SPECIFIED OTHERWISE.
2. THE CONTRACTOR SHALL KEEP A SIGNED SET OF APPROVED PLANS AND SPECIFICATIONS, AND A COPY OF ALL REQUIRED PERMITS ON THIS JOB SITE AT ALL TIMES DURING WORKING OPERATION.
3. ALL TRENCHING AND/ OR SHORING SHALL MEET REQUIREMENTS OF CAL–OSHA.
4. CONTRACTOR SHALL DEMONSTRATE EXTREME CAUTION WHEN TRENCHING IN CLOSE PROXIMITY OF OTHER UTILITIES. ANY SIGN OF DEGRADATION OF THE TRENCH WALL INTEGRITY WILL FORCE THE STOPPAGE OF WORK UNTIL THE TRENCH INTEGRITY IS ADEQUATELY RESTORED.
5. MATERIALS NOT SUITABLE FOR USE ON THIS PROJECT SHALL BECOME THE PROPERTY OF THE CONTRACTOR AND SHALL BE DISPOSED OF OFF–SITE IN ACCORDANCE WITH ALL APPLICABLE LAWS.
6. SPILLAGE RESULTING FROM HAULING OPERATIONS ALONG OR ACROSS ANY PUBLIC TRAVELED WAY SHALL BE REMOVED IMMEDIATELY BY THE CONTRACTOR AND AT THE CONTRACTOR'S EXPENSE.
7. CONTRACTOR SHALL VERIFY ALL EXISTING CONDITIONS AND DIMENSIONS BEFORE STARTING WORK. SHOULD CONDITIONS EXIST WHICH ARE CONTRARY TO THOSE SHOWN ON PLANS OR IN THE SPECIFICATIONS, THE ENGINEER SHALL BE NOTIFIED PRIOR TO PROCEEDING WITH THE WORK.
8. CONTRACTOR SHALL HANDLE AND DISPOSE OF ALL HAZARDOUS MATERIALS, SUCH AS ACP, IN ACCORDANCE WITH APPLICABLE LAW AND/ OR REGULATION AT CONTRACTOR'S EXPENSE. CONTRACTOR SHALL BARE FULL RESPONSIBILITY FOR HAZARDOUS MATERIALS THAT ARE REMOVED OR DISTURBED BY CONTRACTOR.
9. PURSUANT TO THE BUSINESS AND PROFESSIONS CODE/ LAND SURVEYORS ACT SECTION 8771 OF THE STATE OF CALIFORNIA, ALL SURVEY MONUMENTS DESTROYED BY CONSTRUCTION SHALL BE PERPETUATED BY A CALIFORNIA LICENSED LAND SURVEYOR IN ACCORDANCE TO THE METHODOLOGY AND DOCUMENTATION REQUIREMENTS OF THE LOCAL CITY, AND COUNTY JURISDICTIONS. IN THE EVENT THAT OCPW /OC SURVEY IS NOT COMMISSIONED TO PERFORM CONSTRUCTION SUPPORT SERVICES FOR THIS PROJECT THEN THE CONTRACTOR SHALL BE RESPONSIBLE FOR ALL ASSOCIATED COST WITH THIS MONUMENT PERPETUATION.
10. CONTRACTOR SHALL ENSURE CONTINUOUS PEDESTRIAN AND BICYCLE ACCESS DURING CONSTRUCTION.
11. NO CONSTRUCTION SHALL TAKE PLACE ON MEMORIAL DAY AND LABOR DAY.

## STRUCTURAL NOTES:

1. DIMENSIONS FROM FACE OF CONCRETE TO STEEL SHALL BE 2" CLEAR UNLESS OTHER WISE SHOWN.
2. CONCRETE DIMENSIONS SHALL BE MEASURED HORIZONTALLY OR VERTICALLY ON THE PROFILE, AND PARALLEL TO OR AT RIGHT ANGLES OR RADIALLY) TO CENTERLINE OF CONDUIT ON THE PLAN EXCEPT AS OTHERWISE SHOWN.
3. TRANSVERSE CONST. JOINTS SHALL NOT BE PLACED WITHIN 30" OF INLETS.
4. TRANSVERSE CONST.JOINTS IN WALLS & SLABS SHALL BE IN THE SAME PLANE. NO STAGGERING OF JOINTS WILL BE PERMITTED TRANSVERSE CONST. JOINTS SHALL BE NORMAL OR RADIAL TO THE CENTERLINE OF CONST.
5. THE LONGITUDINAL & TRANSVERSE REINFORCING STEEL SHALL TERMINATE 2" FROM THE CONCRETE SURFACES UNLESS OTHERWISE SHOWN ON DETAIL.
6. NO SPLICES IN TRANSVERSE STEEL REINFORCEMENT WILL BE PERMITTED OTHER THAN THOSE SHOWN ON THE DRAWINGS WITHOUT APPROVAL OF ENGINEER. NO MORE THAN TWO SPLICES WILL BE PERMITTED IN ANY LONGITUDINAL BAR BETWEEN TRANSVERSE JOINTS. SPLICES SHALL BE STAGGERED.
7. TRANSVERSE JOINTS SHALL BE SPACED NOT TO EXCEED 50' NOR BE LESS THAN 10' MEASURED ALONG THE CENTERLINE OF CONSTRUCTION, EXCEPT AS OTHERWISE SHOWN ON THE DRAWINGS. SEE OCPW STD. PLAN 1318 FOR JOINT DETAILS.
8. AT THE BEGINNING AND ENDING OF ALL POURS, A COMPLETE CURTAIN OF REINFORCEMENT SHALL BE PLACED 3" FROM TRANSVERSE CONSTRUCTION JOINT.
9. BURY BARS MAY BE USED AT CONTRACTOR'S OWN EXPENSE AND SHALL NOT COUNT AS PART OF THE STEEL PAYOUT.
10. ELEVATION OF WEEP HOLE ABOVE INVERT SHALL BE UNIFORM THROUGH ENTIRE REACH OF PROJECT.
11. EXPOSED CHANNEL/RCB SURFACES SHALL BE GIVEN:
    - 11.1. INVERT: STEEL TROWEL FINISH
    - 11.2. WALLS: LIGHT BROOM FINISH
    - 11.3. ALL OTHER: "ORDINARY SURFACE FINISH" PER 1.9.2 OF THE GREENBOOK AS MODIFIED BY THE SPECIAL PROVISIONS
12. PARALLEL ROLLS OF TYPE I & TYPE II FILTER FABRICS SHALL OVERLAP A MINIMUM OF 18 INCHES UNDER CONCRETE STRUCTURES AND ROADWAY SECTIONS, 30 INCHES UNDER RIPRAP MATERIAL OR GABION STRUCTURES, OR SEWN IF REQUIRED OR AS SPECIFIED BY THE MANUFACTURER'S SPECIFICATIONS. THE OVERLAPPED PORTION SHALL BE LOCATED BETWEEN THE CONCRETE SECTION AND THE GRAVEL BASE MATERIAL. REFER TO OCPW STD. PLAN 1808 FOR ADDITIONAL DETAILS.

## POLLUTION PREVENTION NOTES:

1. CONTRACTOR TO KEEP THE UPDATED SWPPP ON SITE AT ALL TIMES DURING WORKING OPERATIONS.
2. SEDIMENT FROM AREAS DISTURBED BY CONSTRUCTION SHALL BE RETAINED ON SITE USING STRUCTURAL CONTROLS TO THE MAXIMUM EXTENT PRACTICABLE.
3. STOCKPILES OF SOIL SHALL BE PROPERLY CONTAINED TO ELMINATE OR REDUCE SEDIMENT TRANSPORT FROM THE SITE TO THE STREETS, DRAINAGE FACILITIES OR ADJACENT PROPERTIES VIA RUNOFF, VEHICLE TRACKING, OR WIND.
4. APPROPRIATE BMPS FOR CONSTRUCTION–RELATED MATERIALS, WASTES, SPILLS OR RESIDUES SHALL BE IMPLEMENTED TO MINIMIZE TRANSPORT FROM THE SITE TO STREETS, DRAINAGE FACILITIES, OR ADJOINING PROPER TIES BY WIND OR RUNOFF.
5. RUNOFF FROM EQUIPMENT AND VEHICLE WASHING SHALL BE CONTAINED AT CONSTRUCTION SITES UNLESS TREATED TO REDUCE OR REMOVE SEDIMENT AND OTHER POLLUTANTS.
6. ALL CONTRACTOR AND SUBCONTRACTOR PERSONNEL ARE TO BE MADE AWARE OF THE REQUIRED BEST MANAGEMENT PRACTICES AND GOOD HOUSEKEEPING MEASURES FOR THE PROJECT SITE AND ANY ASSOCIATED CONSTRUCTION STAGING AREAS.
7. AT THE END OF EACH DAY OF CONSTRUCTION ACTIVITY ALL CONSTRUCTION DEBRIS AND WASTE MATERIALS SHALL BE COLLECTED AND PROPERLY DISPOSED OF IN TRASH OR RECYCLE BINS.
8. CONSTRUCTION SITES SHALL BE MAINTAINED IN SUCH A CONDITION THAT A STORM DOES NOT CARRY WASTES OR POLLUTANTS OFF THE SITE. DISCHARGES OTHER THAN STORM WATER (NON–STORM WATER DISCHARGES) ARE PROHIBITED, EXCEPT AS AUTHORIZED BY AN INDIVIDUAL NPDES PERMIT OR THE STATE WIDE GENERAL CONSTRUCTION STORM WATER PERMIT.
   - 8.1. POTENTIAL POLLUTANTS INCLUDE BUT ARE NOT LIMITED TO: SOLID OR LIQUID CHEMICAL SPILLS; WASTES FROM PAINTS, STAINS, SEALANTS, SOLVENTS, DETERGENTS, GLUES, LIME, PESTICIDES, HERBICIDES, FERTILIZERS, WOOD PRESERVATIVES, AND ASBESTOS FIBERS, PAINT FLAKES OR STUCCO. FRAGMENTS; FUELS, OILS, LUBRICANTS, AND HYDRAULIC, RADIATOR OR BATTERY FLUIDS; CONCRETE AND RELATED CUTTING OR CURING RESIDUES; FLOATABLE WASTES; WASTES FROM ENGINE / EQUIPMENT STEAM CLEANING OR CHEMICAL DEGREASING; WASTES FROM STREET CLEANING; AND SUPER–CHLORINATED POTABLE WATER FROM LINE FLUSHING AND TESTING.
   - 8.2. DURING CONSTRUCTION, DISPOSAL OF SUCH MATERIALS SHOULD OCCUR IN A SPECIFIED AND CONTROLLED TEMPORARY AREA ON–SITE PHYSICALLY SEPARATED FROM POTENTIAL STORMWATER RUNOFF, WITH ULTIMATE DISPOSAL IN ACCORDANCE WITH LOCAL, STATE AND FEDERAL REQUIREMENTS.
9. DISCHARGING CONTAMINATED GROUNDWATER PRODUCED BY DE WATERINGN GROUND WATER THAT HAS INFILTRATED INTO CONSTRUCTION SITES IS PROHIBITED. DISCHARGING OF CONTAMINATED SOILS VIA SURFACE EROSION IS ALSO PROHIBITED. DISCHARGING OF NON –– CONTAMINATED GROUNDWATER PRODUCED BY DEWATERING SHALL COMPLY WITH ORDER NO. R8––2009––0030 NPDES MUNICIPAL STORM WATER PERMIT OF THE SANTA ANA REGIONAL WATER QUALITY CONTROL BOARD. ANY INDICATION OR EVIDENCE OF WATER QUALITY THAT DOES NOT MEET REQUIRED STANDARDS WILL BE REPORTED TO OC PUBLIC WORKS/WATER QUALITY COMPLIANCE.
10. OC ENVIRONMENTAL RESOURCES WILL PERIODICALLY TEST pH AND TURBIDITY UPSTREAM & DOWNSTREAM OF THE PROJECT SITE TO FULFILL REGIONAL WATER QUALITY CONTROL BOARD REQUIREMENTS.

## DEMOLITION NOTES:

1. REMOVE EXISTING AC SIDEWALK
2. REMOVE EXISTING CONCRETE CHANNEL
3. REMOVE EXISTING RCB BRIDGE
4. REMOVE EXISTING CONCRETE SIDEWALK
5. REMOVE EXISTING CONCRETE CURB AND GUTTER
6. REMOVE PARKING METER POST AND FOUNDATION. EXISTING PARKING METER AND PARKING SENSOR TO BE REMOVED BY CITY OF LAGUNA BEACH
7. REMOVE EXISTING TREE
8. REMOVE EXISTING PLANTER BOX
9. REMOVE AND SALVAGE EXISTING CONCRETE WASTE RECEPTACLE
10. REMOVE CHAINLINK FENCE
11. REMOVE AND SALVAGE EXISTING SIGN
12. REMOVE, SALVAGE, AND REINSTALL EXISTING STREET LIGHT
13. REMOVE EXISTING BRICK PAVERS
14. REMOVE EXISTING LANDSCAPING WITHIN LIMITS OF DEMOLITION
15. REMOVE AND SALVAGE EXISTING BENCH
16. REMOVE AND SALVAGE WATER METER
17. REMOVE AND SALVAGE EXISTING CHANGE MACHINE AND DELIVER TO CITY OF LAGUNA BEACH
18. REMOVE EXISTING PCC PEDESTRIAN RAMP
19. REMOVE IRRIGATION CONTROL VALVES
20. REMOVE EXISTING CHANNEL AND STRUTS
21. REMOVE AND REPLACE ABOVE GRADE WATER LINE
22. OCTA TO SALVAGE EXISTING BUS SIGN
23. REMOVE SD LATERAL TO FIRST AVAILABLE PIPE JOINT
24. REMOVE AND SALVAGE ELECTRICAL PULLBOX
25. REMOVE, SALVAGE AND REINSTALL ART FEATURE ON NEW FOOTING
26. REMOVE LOCAL DEPRESSION
27. REMOVE AND SALVAGE EXISTING ASH URN
28. REMOVE AND SALVAGE EXISTING DOG BAG DISPENSER AND DELIVER TO THE CITY OF LAGUNA BEACH
29. REMOVE AND SALVAGE (3) CONCRETE SPHERES AND FOUNDATIONS. RELOCATE PER LANDSCAPE PLANS
30. REMOVE, SALVAGE, AND REINSTALL BIKE RACK ON NEW 6" THICK CONCRETE SLAB. SEE STRUCTURAL SHEETS

(A) ADJUST TO GRADE
(P) PROTECT IN PLACE
(R) RELOCATE

## CONSTRUCTION NOTES:

1. CONSTRUCT 4" THICK PCC SIDEWALK PER OCPW STD. PLAN 112–2. INTEGRAL COLOR AND SURFACE RETARDER PER THE SPECIFICATIONS.
2. CONSTRUCT SIDEWALK RAMP PER CALTRANS STD. PLAN RSP A88A, CASE C WITH DETECTABLE WARNING SURFACE, MODIFIED PER DETAIL ON SHEETS 14 & 15.
3. CONSTRUCT 6" CURB AND GUTTER PER OCPW STD. PLAN 120–2, TYPE A2–6 (150) (W=18").
4. CONSTRUCT PARKING METER FOUNDATION PER CITY OF LAGUNA BEACH STD. DETAIL 641–0.
5. CONSTRUCT 8" CURB PER OCPW STD. PLAN 120–2, TYPE A1–8 (200).
6. INSTALL SALVAGED STREET LIGHT. (TO BE FURNISHED BY THE CITY OF LAGUNA BEACH).
7. INSTALL SALVAGED BUS STOP SIGN.
8. CONSTRUCT PEDESTRIAN BRIDGE PER STRUCTURAL DETAIL ON SHEETS 8, 14, 15, 18 & 20.
9. CONSTRUCT CONCRETE CHANNEL PER STRUCTURAL DETAILS ON SHEETS 17, 18, 19 & 20.
10. CONSTRUCT RCB EXTENSION PER STRUCTURAL DETAILS ON SHEETS 8, 14, 15, 18 & 20.
11. CONSTRUCT SIDEWALK RAMP PER CALTRANS STD. PLAN RSP A88A, CASE A WITH DETECTABLE WARNING SURFACE, MODIFIED PER DETAIL ON SHEETS 14 & 15.
12. CONSTRUCT 4" THICK PCC PAVING.
13. CONSTRUCT JUNCTION STRUCTURE – PIPE TO RCB PER SPPWC STD. 333–2 (VALUES FOR A,B & C SHOWN ON PLAN).
14. REINSTALL SALVAGED TRAFFIC SIGN.
15. INSTALL SALVAGED BENCH.
16. CONSTRUCT 5' HIGH DECORATIVE CHANNEL FENCE PER STRUCTURAL DETAILS ON SHEETS 19 & 20.
17. CONSTRUCT SIDEWALK RAMP PER CALTRANS STD. PLAN RSP A88A, CASE G WITH DETECTABLE WARNING SUFACE, MODIFIED PER DETAIL ON SHEETS 14 & 15.
18. CONSTRUCT 18" MAX RETAINING CURB AND RAILING PER STRUCTURAL DETAIL ON SHEET 21.
19. CONSTRUCT 5' HIGH CHAIN LINK FENCE PER OCPW STD. PLAN 600–3.
20. CONSTRUCT LOCAL DEPRESSION PER OCPW STD. 1308.

## ABBREVIATIONS:

| | |
|---|---|
| AB | – AGGREGATE BASE |
| ABN | – ABANDON |
| AC | – ASPHALT CONCRETE |
| ACP | – ASBESTOS CEMENT PIPE |
| ARV | – AIR RELEASE VALVE |
| BC | – BEGIN CURVE |
| C&G | – CURB AND GUTTER |
| CL | – CENTER LINE |
| CAB | – CRUSHED AGGREGATE BASE |
| CB | – CATCH BASIN |
| CONC | – CONCRETE |
| CONST | – CONSTRUCTION |
| CONT | – CONTINUOUS OR CONTINUED |
| DG | – DECOMPOSED GRANITE WALKWAY |
| DTL | – DETAIL |
| EC | – END OF CURVE |
| EFP | – EQUIVALENT FLUID PRESSURE |
| EL | – ELEVATION |
| ESMT | – EASEMENT |
| EX | – EXISTING |
| FL | – FLOW LINE |
| FS | – FINISH SURFACE |
| GL | – GRADE LINE |
| GB | – GRADE BREAK |
| HOR | – HORIZONTAL |
| ICV | – IRRIGATION CONTROL VALVE |
| JT | – JOINT |
| LONGIT | – LONGITUDINAL |
| LT | – LEFT |
| MAT'L | – MATERIAL |
| MAINT | – MAINTENANCE |
| ME | – MATCH EXISTING |
| NS | – NATIVE SOIL |
| OC | – ON CENTER |
| OCPW | – ORANGE COUNTY PUBLIC WORKS |
| OCFCD | – ORANGE COUNTY FLOOD CTRL DISTRICT |
| OH | – OVERHEAD |
| PT | – POINT |
| PCC | – PT. OF COMPOUND CURVE |
| PCC | – PORTLAND CEMENT CONCRETE |
| POB | – PT. OF BEGINNING |
| POE | – PT. OF ENDING |
| POI | – PT. OF INTERSECTION |
| PRC | – PT. OF REVERSE CURVE |
| PROF | – PROFILE |
| PROP | – PROPOSED |
| PSF | – LBS. PER SQUARE FOOT |
| PSI | – LBS. PER SQUARE INCH |
| PVC | – POLYVINYL CHLORIDE |
| R/W | – RIGHT OF WAY |
| RCB | – REINFORCED CONCRETE BOX |
| RT | – RIGHT |
| SCE | – SOUTHERN CALIFORNIA EDISON |
| SD | – STORM DRAIN |
| SHT | – SHEET |
| SMH | – SEWER MANHOLE |
| STD PLN | – STANDARD PLAN |
| SW | – SIDEWALK |
| TOW | – TOP OF WALL |
| TYP | – TYPICAL |
| UNK | – UNKNOWN |
| VEG | – VEGETATION |
| VERT | – VERTICAL |

## LEGEND

SYMBOL PATTERN KEY

- 4" PIPE INLET / PIPE OUTLET
- VAULT – ELECTICAL
- STEEL SIGN
- WATER METER
- SEWER MANHOLE
- SINGLE LIGHT POLE
- WATER VALVE
- PULL BOX – ELECTRICAL
- FIRE HYDRANT
- TREE
- STORM DRAIN MANHOLE
- VAULT UNDEFINED
- STEEL GRATE INLET
- TELEPHONE PULL BOX
- GAS VALVE
- TV CABLE CONTROL BOX
- CB – CATCH BASIN
- DOUBLE GATE
- CO – SEWER CLEAN OUT
- DROP INLET
- ELECTRIC METER
- IRRIGATION PULL BOX
- IRRIGATION VALVE
- PLASTIC ELECTRIC OUTLET BOX
- PLASTIC YARD LIGHT
- GAS METER
- UNDEFINED CONTROL BOX
- BUSH
- DOUBLE LIGHT POLE
- ELECTRIC MANHOLE
- UNDEFINED PARKING METER
- ROCK – BOULDER
- TEMPORARY SUPPORT BEAM FOR SHORING
- UTILITY POLE
- PALM TREE
- MAIL BOX
- POST
- WATER VAULT
- GUY ANCHOR
- TELEPHONE VAULT
- SIGN BOARD
- WARNING SIGN

LINE PATTERN KEY

- CENTERLINE
- EDGE OF CONCRETE
- EDGE OF ASPHALT PAVEMENT
- CHAINLINK FENCE
- PEDESTRIAN RAILING
- RIGHT OF WAY
- DECORATIVE FENCE
- C – PROPOSED TELECOMMUNICATION
- G – PROPOSED GAS
- W – PROPOSED WATER

COUNTY OF ORANGE CALIFORNIA

| MARK | DESCRIPTION | DATE | APPR. |
|---|---|---|---|
| | | | |

PREPARED UNDER THE RESPONSIBLE CHARGE OF:
REGISTERED PROFESSIONAL ENGINEER CIPRIAN STELEA No. 73379 Exp. 12/31/2022 CIVIL STATE OF CALIFORNIA
02/28/22 DATE
CIPRIAN STELEA, P.E.

DESIGNED BY: CS
DRAWN BY: CS
CHECKED BY: BRM
DRAWING NUMBER:
SCALE: AS SHOWN
FILE NAME: XXXXXXXXXXXXXXXXXXX
PLOT DATE: 02/28/2022

County of Orange
OC Public Works

PREPARED BY:
Michael Baker INTERNATIONAL
5 Hutton Centre Drive, Suite 500, Santa Ana, CA 92707
Phone: (949) 472-3505 / MBAKERINTL.COM

REPLACEMENT OF LAGUNA CANYON CHANNEL OCFCD FACILITY No. I02

LAGUNA CANYON CHANNEL REPLACEMENT
**OCFCD FACILITY NO. I02**

NOTES

SHEET
2
SHEET 2 OF 41

H:\PDATA\180154\CADD\STRUC\DLV\0154–NOTES.DWG CSTELEA 2/21/22 9:15 am



EXHIBIT B

NOTES:

1. ANY STREETLIGHTS THAT NEED TO BE REMOVED TO ACCOMMODATE CONSTRUCTION, ARE TO BE REMOVED, SALVAGED, AND REINSTALLED. LIGHT POLES WILL BE SALVAGED ON THE SITE AND REINSTALLED ON NEW CIDH PILE FOUNDATIONS. SEE STRUCTURAL SHEETS FOR CIDH PILE FOUNDATIONS TO BE USED FOR STREET LIGHTS.
2. DO NOT REINSTALL PARKING METERS ALONG LAGUNA CANYON FRONTAGE ROAD. THE CITY WILL FURNISH & INSTALL PAY STATION AND SENSORS AS PART OF, OR IMMEDIATELY FOLLOWING, PROJECT CONSTRUCTION.
3. CONTRACTOR SHALL PROVIDE CITY A MINIMUM NOTICE OF THREE WEEKS TO REMOVE PARKING METER HEADS AND PARKING SENSORS.
4. REMOVE STEEL LAGGING PLATES AND CUT STEEL PILES AT 2 FEET BELOW THE BOTTOM OF THE CHANNEL INVERT ELEVATION.

## LEGEND:

| | |
|---|---|
| EX LAGUNA BEACH COUNTY WATER DISTRICT 36" WATER MAIN | DW |
| EX LAGUNA BEACH COUNTY WATER DISTRICT WATER | W |
| EX CITY OF LAGUNA BEACH SANITARY SEWER | SS |
| EX CITY OF LAGUNA BEACH STORM DRAIN | |
| EX SOCAL GAS LINE | G |
| EX FRONTIER TELECOMMUNICATIONS LINE | CTV |
| EX SCE OVERHEAD LINE | OHL |
| EX ELECTRICAL LINE | E |
| EX TELECOMMUNICATIONS | C |
| EX UNKNOWN LINE | U |
| EX PARKING METER | |
| SAWCUT | |

## DEMOLITION NOTES

1. REMOVE EXISTING AC SIDEWALK
2. REMOVE EXISTING CONCRETE CHANNEL
3. REMOVE EXISTING RCB BRIDGE
4. REMOVE EXISTING CONCRETE SIDEWALK
5. REMOVE EXISTING CONCRETE CURB AND GUTTER
6. REMOVE PARKING METER POST AND FOUNDATION. EXISTING PARKING METER AND PARKING SENSOR TO BE REMOVED BY CITY OF LAGUNA BEACH
7. REMOVE EXISTING TREE
8. REMOVE EXISTING PLANTER BOX
9. REMOVE AND SALVAGE EXISTING CONCRETE WASTE RECEPTACLE
10. REMOVE CHAINLINK FENCE
11. REMOVE AND SALVAGE EXISTING SIGN
12. REMOVE, SALVAGE, AND REINSTALL EXISTING STREET LIGHT
13. REMOVE EXISTING BRICK PAVERS
14. REMOVE EXISTING LANDSCAPING WITHIN LIMITS OF DEMOLITION
17. REMOVE AND SALVAGE EXISTING CHANGE MACHINE AND DELIVER TO CITY OF LAGUNA BEACH
18. REMOVE EXISTING PCC PEDESTRIAN RAMP
23. REMOVE SD LATERAL TO FIRST AVAILABLE PIPE JOINT
24. REMOVE AND SALVAGE ELECTRICAL PULLBOX
25. REMOVE, SALVAGE AND REINSTALL ART FEATURE ON NEW FOOTING
26. REMOVE LOCAL DEPRESSION
29. REMOVE AND SALVAGE (3) CONCRETE SPHERES AND FOUNDATIONS. RELOCATE PER LANDSCAPE PLANS

(P) PROTECT IN PLACE
(R) RELOCATE

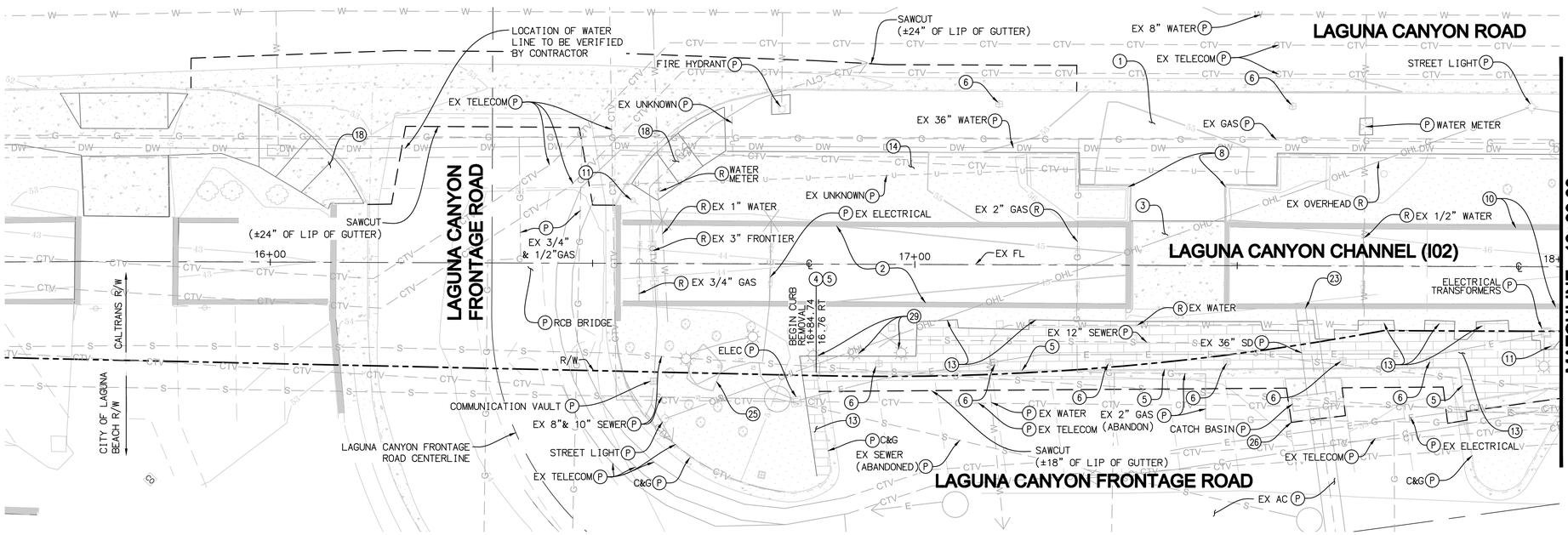


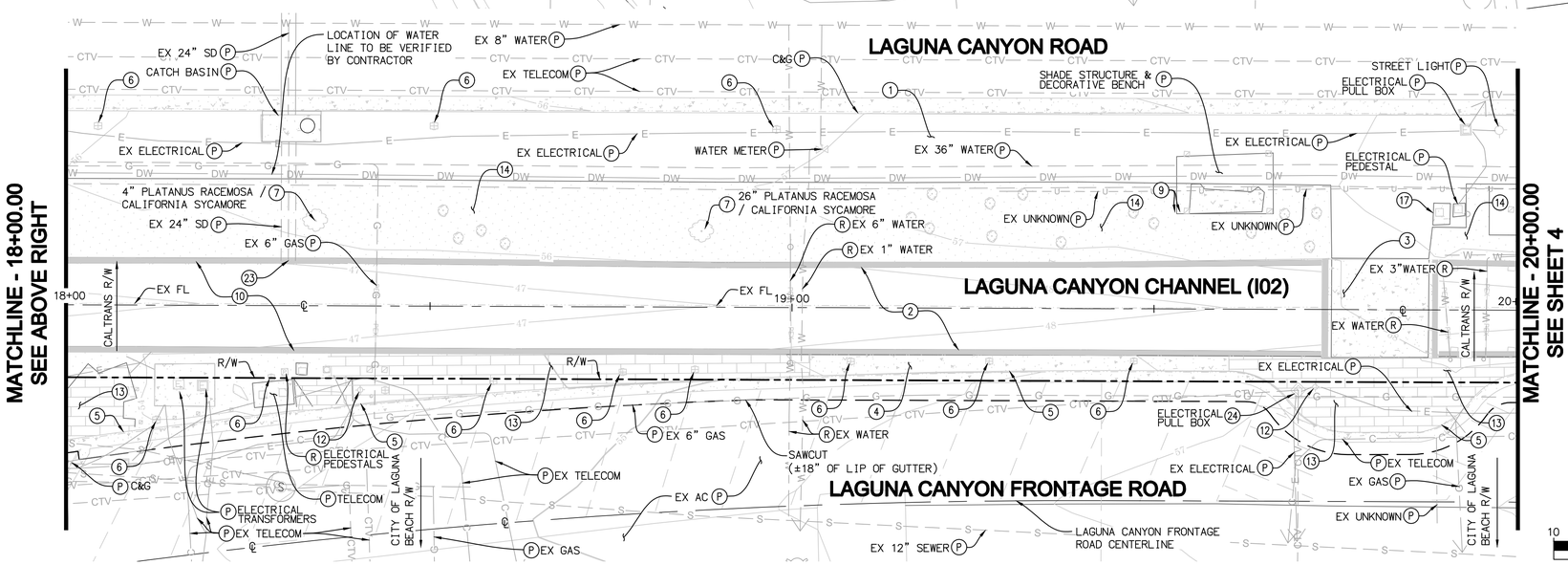


COUNTY OF ORANGE CALIFORNIA

| MARK | DESCRIPTION | DATE | APPR. |
|---|---|---|---|
| | | | |

PREPARED UNDER THE RESPONSIBLE CHARGE OF:
REGISTERED PROFESSIONAL ENGINEER DAVID EAMES No. 55501 CIVIL STATE OF CALIFORNIA
02/28/22 DATE
DAVID EAMES, P.E.

County of Orange OC Public Works

DESIGNED BY: FT
DRAWN BY: RR
CHECKED BY: DE
DRAWING NUMBER:
PREPARED BY: Michael Baker INTERNATIONAL
5 Hutton Centre Drive, Suite 500, Santa Ana, CA 92707 Phone: (949) 472-3505 / MBAKERINTL.COM
FILE NAME: XXXXXXXXXXXXXXXXXXXX
PLOT DATE: 02/28/2022
SCALE: AS SHOWN

LAGUNA CANYON CHANNEL REPLACEMENT
**OCFCD FACILITY NO. I02**

DEMOLITION PLAN - SHEET 1

SHEET 3 OF 41

REPLACEMENT OF LAGUNA CANYON CHANNEL OCFCD FACILITY No. I02

\\RVICAITS1\HROOT\PDATA\180154\CADD\LAND\DLV\GRADING\PRECISE\180154-003-DM.DWG RODRIGUEZ, RAUL 3/17/2022 2:36 PM



EXHIBIT B

NOTES:

1. ANY STREETLIGHTS THAT NEED TO BE REMOVED TO ACCOMMODATE CONSTRUCTION, ARE TO BE REMOVED, SALVAGED, AND REINSTALLED. LIGHT POLES WILL BE SALVAGED ON THE SITE AND REINSTALLED ON NEW CIDH PILE FOUNDATIONS. SEE STRUCTURAL SHEETS FOR CIDH PILE FOUNDATIONS TO BE USED FOR STREET LIGHTS.
2. DO NOT REINSTALL PARKING METERS ALONG LAGUNA CANYON FRONTAGE ROAD. THE CITY WILL FURNISH & INSTALL PAY STATION AND SENSORS AS PART OF, OR IMMEDIATELY FOLLOWING, PROJECT CONSTRUCTION.
3. CONTRACTOR SHALL PROVIDE CITY A MINIMUM NOTICE OF THREE WEEKS TO REMOVE PARKING METER HEADS AND PARKING SENSORS.
4. REMOVE STEEL LAGGING PLATES AND CUT STEEL PILES AT 2 FEET BELOW THE BOTTOM OF THE CHANNEL INVERT ELEVATION.

## LEGEND:

EX LAGUNA BEACH COUNTY WATER DISTRICT 36" WATER MAIN — DW
EX LAGUNA BEACH COUNTY WATER DISTRICT WATER — W
EX CITY OF LAGUNA BEACH SANITARY SEWER — SS
EX CITY OF LAGUNA BEACH STORM DRAIN
EX SOCAL GAS LINE — G
EX FRONTIER TELECOMMUNICATIONS LINE — CTV
EX SCE OVERHEAD LINE — OHL
EX ELECTRICAL LINE — E
EX TELECOMMUNICATIONS — C
EX UNKNOWN LINE — U
EX PARKING METER
SAWCUT

## DEMOLITION NOTES

(1) REMOVE EXISTING AC SIDEWALK
(4) REMOVE EXISTING CONCRETE SIDEWALK
(5) REMOVE EXISTING CONCRETE CURB AND GUTTER
(6) REMOVE PARKING METER POST AND FOUNDATION. EXISTING PARKING METER AND PARKING SENSOR TO BE REMOVED BY CITY OF LAGUNA BEACH
(7) REMOVE EXISTING TREE
(10) REMOVE CHAINLINK FENCE
(11) REMOVE AND SALVAGE EXISTING SIGN
(12) REMOVE, SALVAGE, AND REINSTALL EXISTING STREET LIGHT
(14) REMOVE EXISTING LANDSCAPING WITHIN LIMITS OF DEMOLITION
(20) REMOVE EXISTING CHANNEL AND STRUTS
(23) REMOVE SD LATERAL TO FIRST AVAILABLE PIPE JOINT
(30) REMOVE, SALVAGE, AND REINSTALL BIKE RACK ON NEW 6" THICK CONCRETE SLAB. SEE STRUCTURAL SHEETS
(P) PROTECT IN PLACE

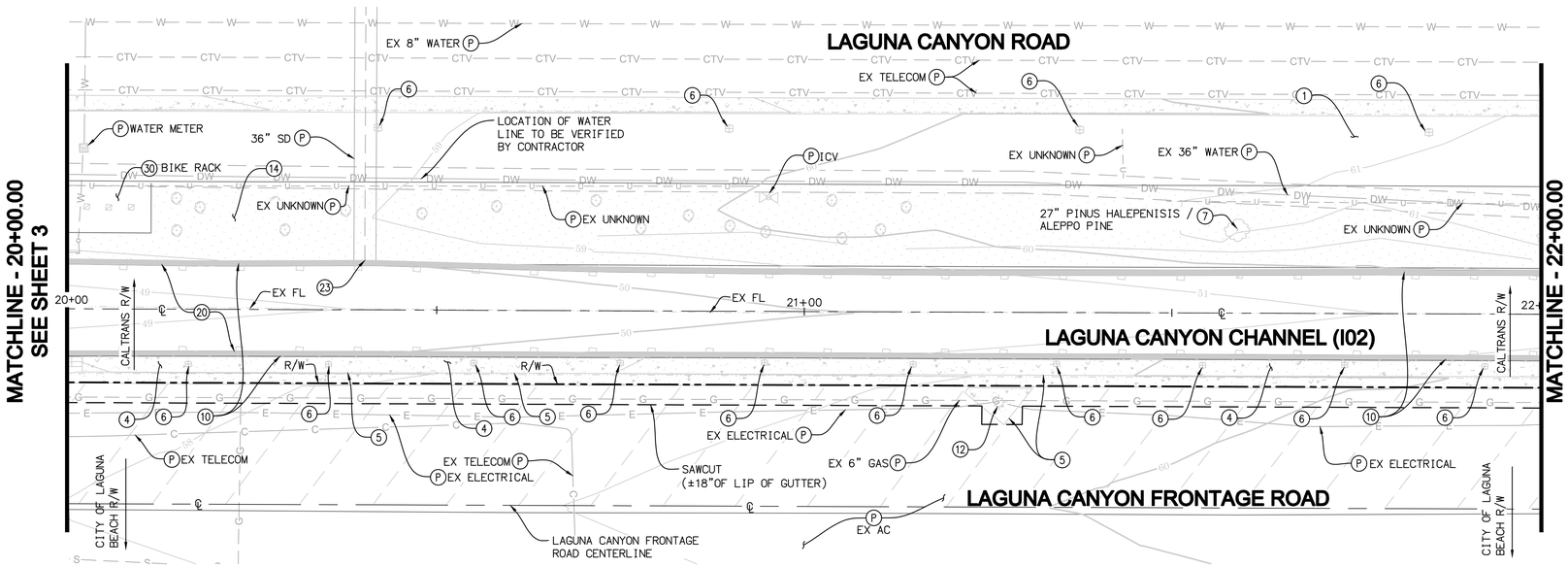


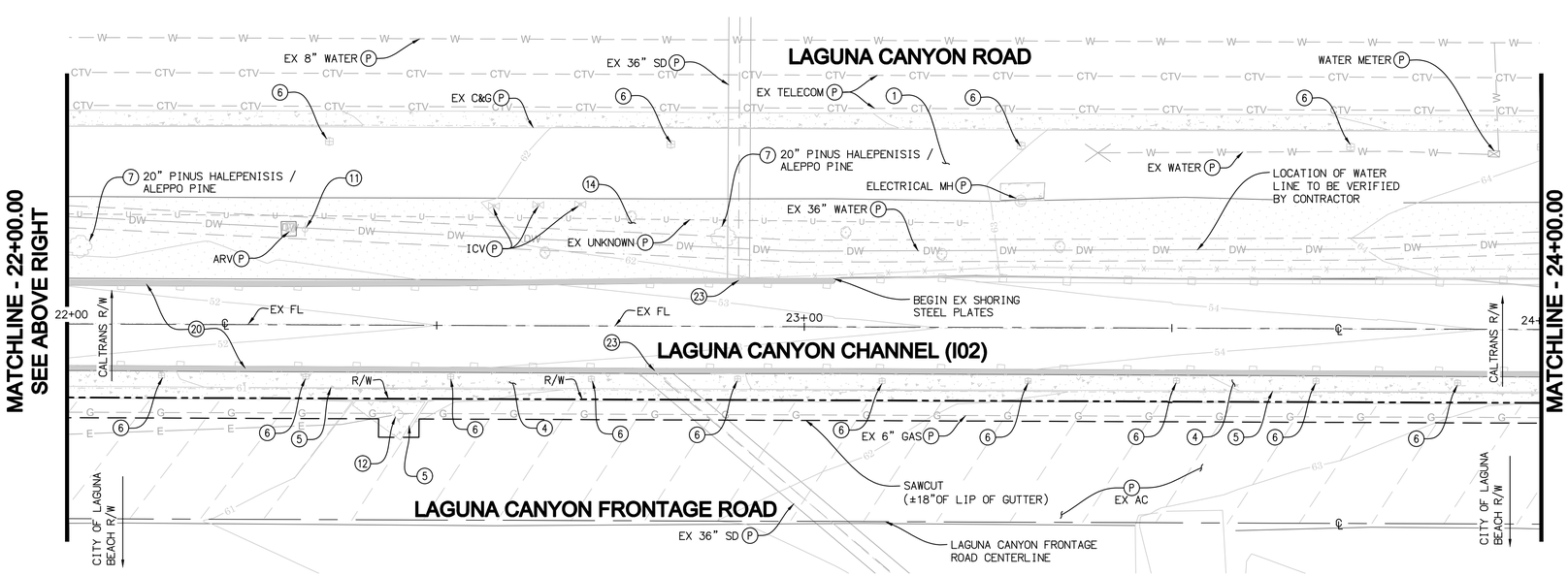


SCALE 1"=10'

10 5 0 10 20 30
SCALE: 1"=10'

COUNTY OF ORANGE CALIFORNIA

| MARK | DESCRIPTION | DATE | APPR. |
|---|---|---|---|

PREPARED UNDER THE RESPONSIBLE CHARGE OF:
REGISTERED PROFESSIONAL ENGINEER DAVID EAMES No. 55501 CIVIL STATE OF CALIFORNIA
02/28/22 DATE
DAVID EAMES, P.E.

DESIGNED BY: FT
DRAWN BY: RR
CHECKED BY: DE
DRAWING NUMBER:
FILE NAME: XXXXXXXXXXXXXXXXXX
PLOT DATE: 02/28/2022
SCALE: AS SHOWN

County of Orange OC Public Works

PREPARED BY: Michael Baker INTERNATIONAL
5 Hutton Centre Drive, Suite 500, Santa Ana, CA 92707
Phone: (949) 472-3505 - MBAKERINTL.COM

LAGUNA CANYON CHANNEL REPLACEMENT
**OCFCD FACILITY NO. I02**

DEMOLITION PLAN - SHEET 2

SHEET
4
SHEET 4 OF 41

REPLACEMENT OF LAGUNA CANYON CHANNEL OCFCD FACILITY No. I02

\\RVICA1FS1\HROOT\PDATA\180154\CADD\LAND\DLV\GRADING\PRECISE\180154-004-DM.DWG RODRIGUEZ, RAUL 3/17/2022 9:32 AM



EXHIBIT B

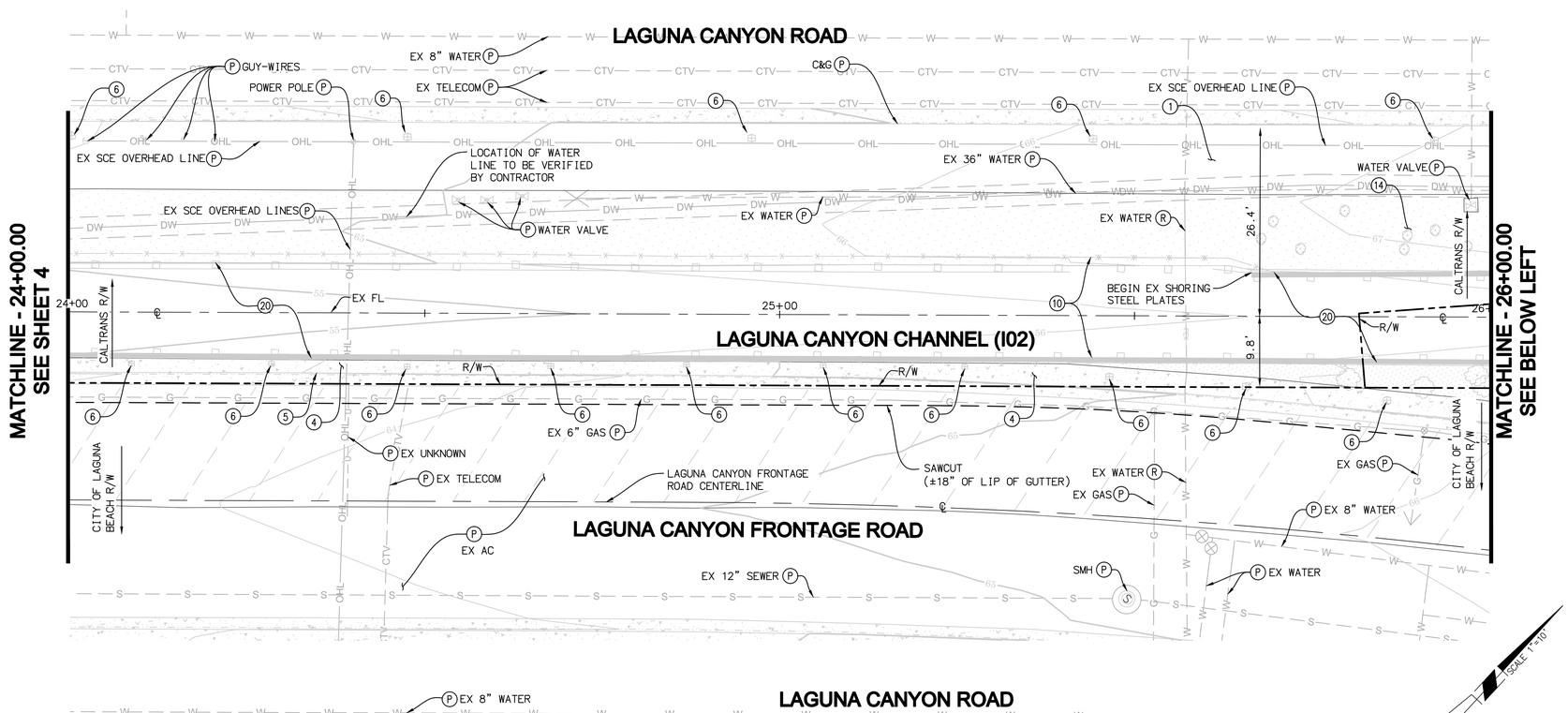


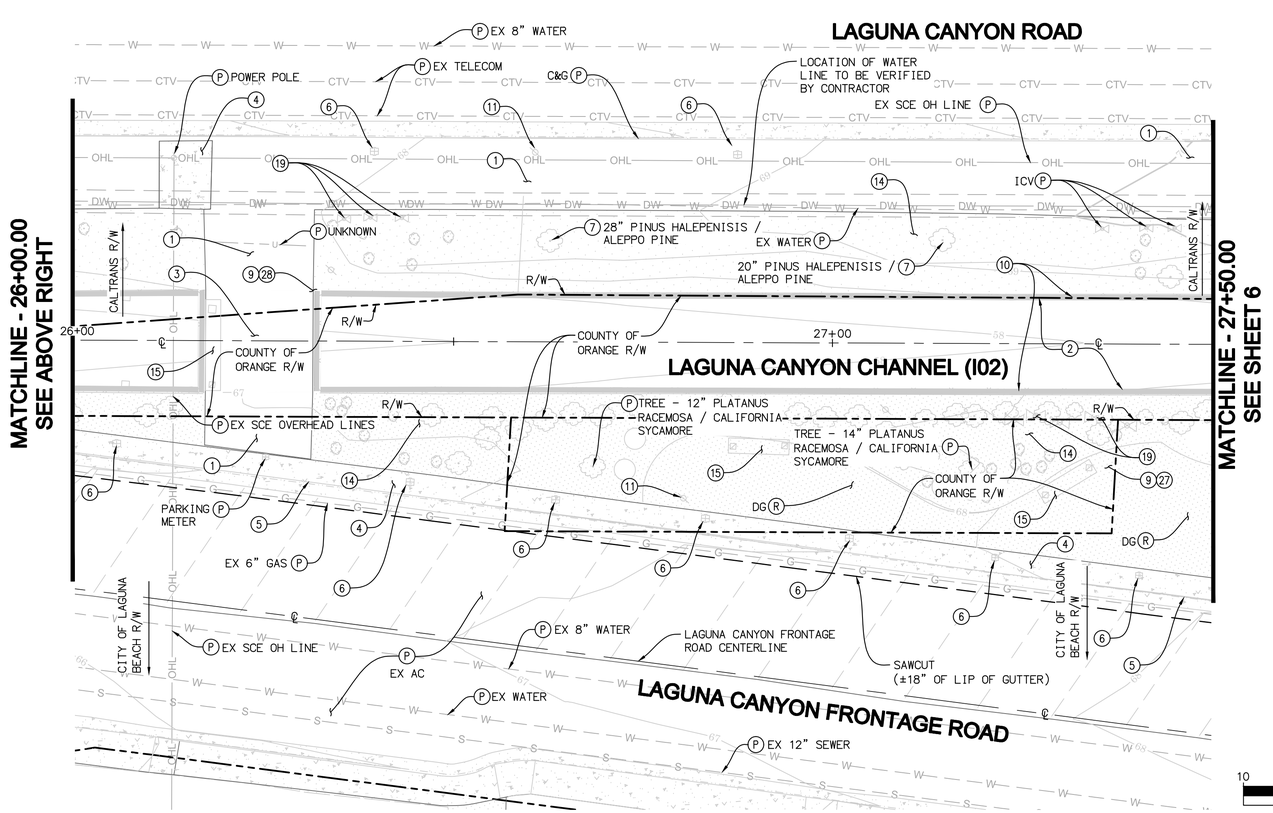


## DEMOLITION NOTES

1. REMOVE EXISTING AC SIDEWALK
2. REMOVE EXISTING CONCRETE CHANNEL
3. REMOVE EXISTING RCB BRIDGE
4. REMOVE EXISTING CONCRETE SIDEWALK
5. REMOVE EXISTING CONCRETE CURB AND GUTTER
6. REMOVE PARKING METER POST AND FOUNDATION. EXISTING PARKING METER AND PARKING SENSOR TO BE REMOVED BY CITY OF LAGUNA BEACH
7. REMOVE EXISTING TREE
9. REMOVE AND SALVAGE EXISTING CONCRETE WASTE RECEPTACLE
10. REMOVE CHAINLINK FENCE
11. REMOVE AND SALVAGE EXISTING SIGN
14. REMOVE EXISTING LANDSCAPING WITHIN LIMITS OF DEMOLITION
15. REMOVE AND SALVAGE EXISTING BENCH
19. REMOVE IRRIGATION CONTROL VALVES
20. REMOVE EXISTING CHANNEL AND STRUTS
27. REMOVE AND SALVAGE EXISTING ASH URN
28. REMOVE AND SALVAGE EXISTING DOG BAG DISPENSER AND DELIVER TO THE CITY OF LAGUNA BEACH

(P) PROTECT IN PLACE
(R) RELOCATE

## LEGEND:

| | |
|---|---|
| EX LAGUNA BEACH COUNTY WATER DISTRICT 36" WATER MAIN | DW |
| EX LAGUNA BEACH COUNTY WATER DISTRICT WATER | W |
| EX CITY OF LAGUNA BEACH SANITARY SEWER | SS |
| EX CITY OF LAGUNA BEACH STORM DRAIN | |
| EX SOCAL GAS LINE | G |
| EX FRONTIER TELECOMMUNICATIONS LINE | CTV |
| EX SCE OVERHEAD LINE | OHL |
| EX ELECTRICAL LINE | E |
| EX TELECOMMUNICATIONS | C |
| EX UNKNOWN LINE | U |
| EX PARKING METER | |
| SAWCUT | |

## NOTES:

1. ANY STREETLIGHTS THAT NEED TO BE REMOVED TO ACCOMMODATE CONSTRUCTION, ARE TO BE REMOVED, SALVAGED, AND REINSTALLED. LIGHT POLES WILL BE SALVAGED ON THE SITE AND REINSTALLED ON NEW CIDH PILE FOUNDATIONS. SEE STRUCTURAL SHEETS FOR CIDH PILE FOUNDATIONS TO BE USED FOR STREET LIGHTS.
2. DO NOT REINSTALL PARKING METERS ALONG LAGUNA CANYON FRONTAGE ROAD. THE CITY WILL FURNISH & INSTALL PAY STATION AND SENSORS AS PART OF, OR IMMEDIATELY FOLLOWING, PROJECT CONSTRUCTION.
3. CONTRACTOR SHALL PROVIDE CITY A MINIMUM NOTICE OF THREE WEEKS TO REMOVE PARKING METER HEADS AND PARKING SENSORS.
4. REMOVE STEEL LAGGING PLATES AND CUT STEEL PILES AT 2 FEET BELOW THE BOTTOM OF THE CHANNEL INVERT ELEVATION.

COUNTY OF ORANGE CALIFORNIA

| MARK | DESCRIPTION | DATE | APPR. |
|---|---|---|---|
| | | | |

PREPARED UNDER THE RESPONSIBLE CHARGE OF:
REGISTERED PROFESSIONAL ENGINEER DAVID EAMES No. 55501 CIVIL STATE OF CALIFORNIA
DAVID EAMES, P.E. — DATE 02/28/22

DESIGNED BY: FT
DRAWN BY: RR
CHECKED BY: DE
DRAWING NUMBER:
FILE NAME: XXXXXXXXXXXXXXXXXX
PLOT DATE: 02/28/2022
SCALE: AS SHOWN

County of Orange — OC Public Works

PREPARED BY: Michael Baker INTERNATIONAL
5 Hutton Centre Drive, Suite 500, Santa Ana, CA 92707
Phone: (949) 472-3505 - MBAKERINTL.COM

LAGUNA CANYON CHANNEL REPLACEMENT
**OCFCD FACILITY NO. I02**

DEMOLITION PLAN - SHEET 3

SHEET 5 OF 41

REPLACEMENT OF LAGUNA CANYON CHANNEL OCFCD FACILITY No. I02

\\RVICA1FS1\HROOT\PDATA\180154\CADD\LAND\DLV\GRADING\PRECISE\180154-005-DM.DWG RODRIGUEZ, RAUL 3/17/2022 9:32 AM



EXHIBIT B

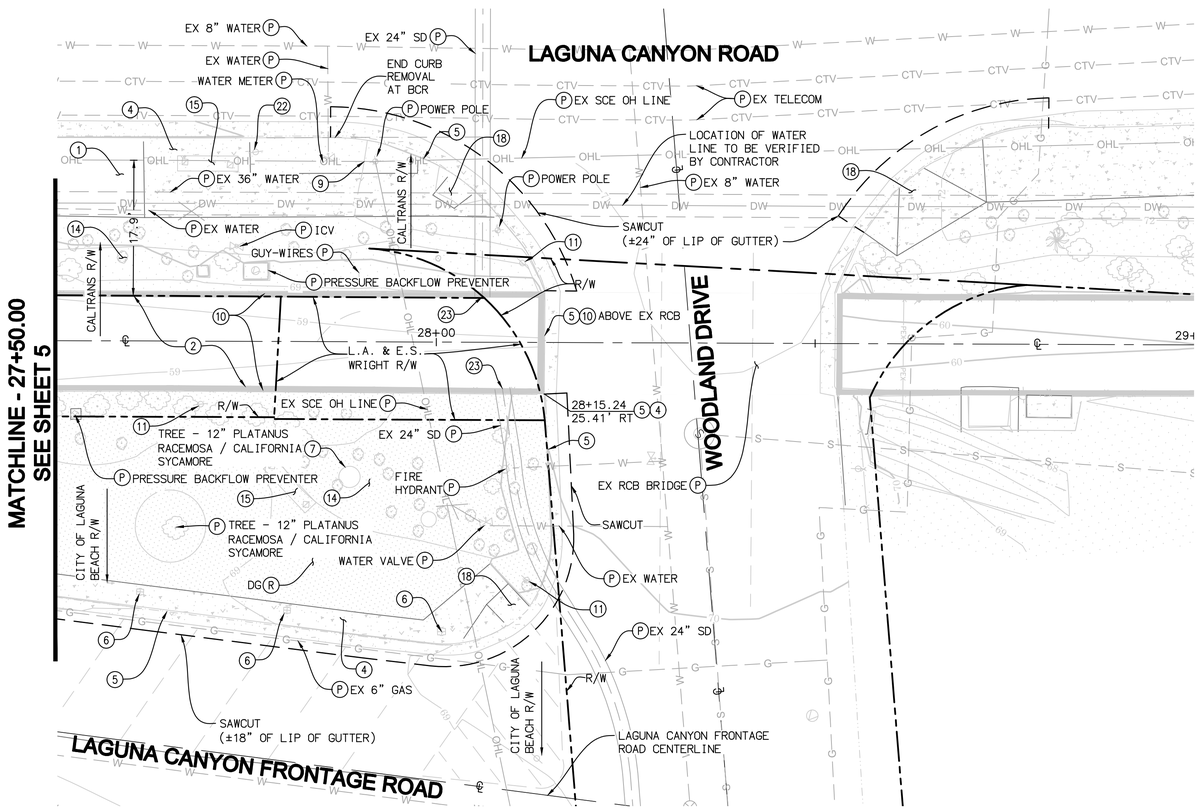


## DEMOLITION NOTES

1. REMOVE EXISTING AC SIDEWALK
2. REMOVE EXISTING CONCRETE CHANNEL
4. REMOVE EXISTING CONCRETE SIDEWALK
5. REMOVE EXISTING CONCRETE CURB AND GUTTER
6. REMOVE PARKING METER POST AND FOUNDATION. EXISTING PARKING METER AND PARKING SENSOR TO BE REMOVED BY CITY OF LAGUNA BEACH
7. REMOVE EXISTING TREE
9. REMOVE AND SALVAGE EXISTING CONCRETE WASTE RECEPTACLE
10. REMOVE CHAINLINK FENCE
11. REMOVE AND SALVAGE EXISTING SIGN
14. REMOVE EXISTING LANDSCAPING WITHIN LIMITS OF DEMOLITION
15. REMOVE AND SALVAGE EXISTING BENCH
18. REMOVE EXISTING PCC PEDESTRIAN RAMP
22. OCTA TO SALVAGE EXISTING BUS SIGN
23. REMOVE SD LATERAL TO FIRST AVAILABLE PIPE JOINT

(P) PROTECT IN PLACE
(R) RELOCATE

## LEGEND:

| | |
|---|---|
| EX LAGUNA BEACH COUNTY WATER DISTRICT 36" WATER MAIN | DW |
| EX LAGUNA BEACH COUNTY WATER DISTRICT WATER | W |
| EX CITY OF LAGUNA BEACH SANITARY SEWER | SS |
| EX CITY OF LAGUNA BEACH STORM DRAIN | |
| EX SOCAL GAS LINE | G |
| EX FRONTIER TELECOMMUNICATIONS LINE | CTV |
| EX SCE OVERHEAD LINE | OHL |
| EX ELECTRICAL LINE | E |
| EX TELECOMMUNICATIONS | C |
| EX UNKNOWN LINE | U |
| EX PARKING METER | |
| SAWCUT | |

## NOTES:

1. ANY STREETLIGHTS THAT NEED TO BE REMOVED TO ACCOMMODATE CONSTRUCTION, ARE TO BE REMOVED, SALVAGED, AND REINSTALLED. LIGHT POLES WILL BE SALVAGED ON THE SITE AND REINSTALLED ON NEW CIDH PILE FOUNDATIONS. SEE STRUCTURAL SHEETS FOR CIDH PILE FOUNDATIONS TO BE USED FOR STREET LIGHTS.
2. DO NOT REINSTALL PARKING METERS ALONG LAGUNA CANYON FRONTAGE ROAD. THE CITY WILL FURNISH & INSTALL PAY STATION AND SENSORS AS PART OF, OR IMMEDIATELY FOLLOWING, PROJECT CONSTRUCTION.
3. CONTRACTOR SHALL PROVIDE CITY A MINIMUM NOTICE OF THREE WEEKS TO REMOVE PARKING METER HEADS AND PARKING SENSORS.
4. REMOVE STEEL LAGGING PLATES AND CUT STEEL PILES AT 2 FEET BELOW THE BOTTOM OF THE CHANNEL INVERT ELEVATION.

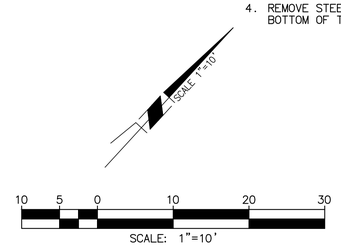


COUNTY OF ORANGE CALIFORNIA

| MARK | DESCRIPTION | DATE | APPR. |
|---|---|---|---|
| | | | |

PREPARED UNDER THE RESPONSIBLE CHARGE OF:
REGISTERED PROFESSIONAL ENGINEER DAVID EAMES No. 55501 CIVIL STATE OF CALIFORNIA
02/28/22 DATE
DAVID EAMES, P.E.

DESIGNED BY: FT
DRAWN BY: RR
CHECKED BY: DE
DRAWING NUMBER: XXX
FILE NAME: XXXXXXXXXXXXXXXXXXXX
PLOT DATE: 02/28/2022
SCALE: AS SHOWN

County of Orange
OC Public Works

PREPARED BY:
Michael Baker INTERNATIONAL
5 Hutton Centre Drive, Suite 500, Santa Ana, CA 92707
Phone: (949) 472-3505 - MBAKERINTL.COM

LAGUNA CANYON CHANNEL REPLACEMENT
**OCFCD FACILITY NO. I02**

DEMOLITION PLAN - SHEET 4

SHEET
6
SHEET 6 OF 41

REPLACEMENT OF LAGUNA CANYON CHANNEL OCFCD FACILITY No. I02

\\IRVICAIFS1\HROOT\PDATA\180154\CADD\LAND\DLV\GRADING\PRECISE\180154-006-DM.DWG RODRIGUEZ, RAUL 3/17/2022 2:35 PM



EXHIBIT B

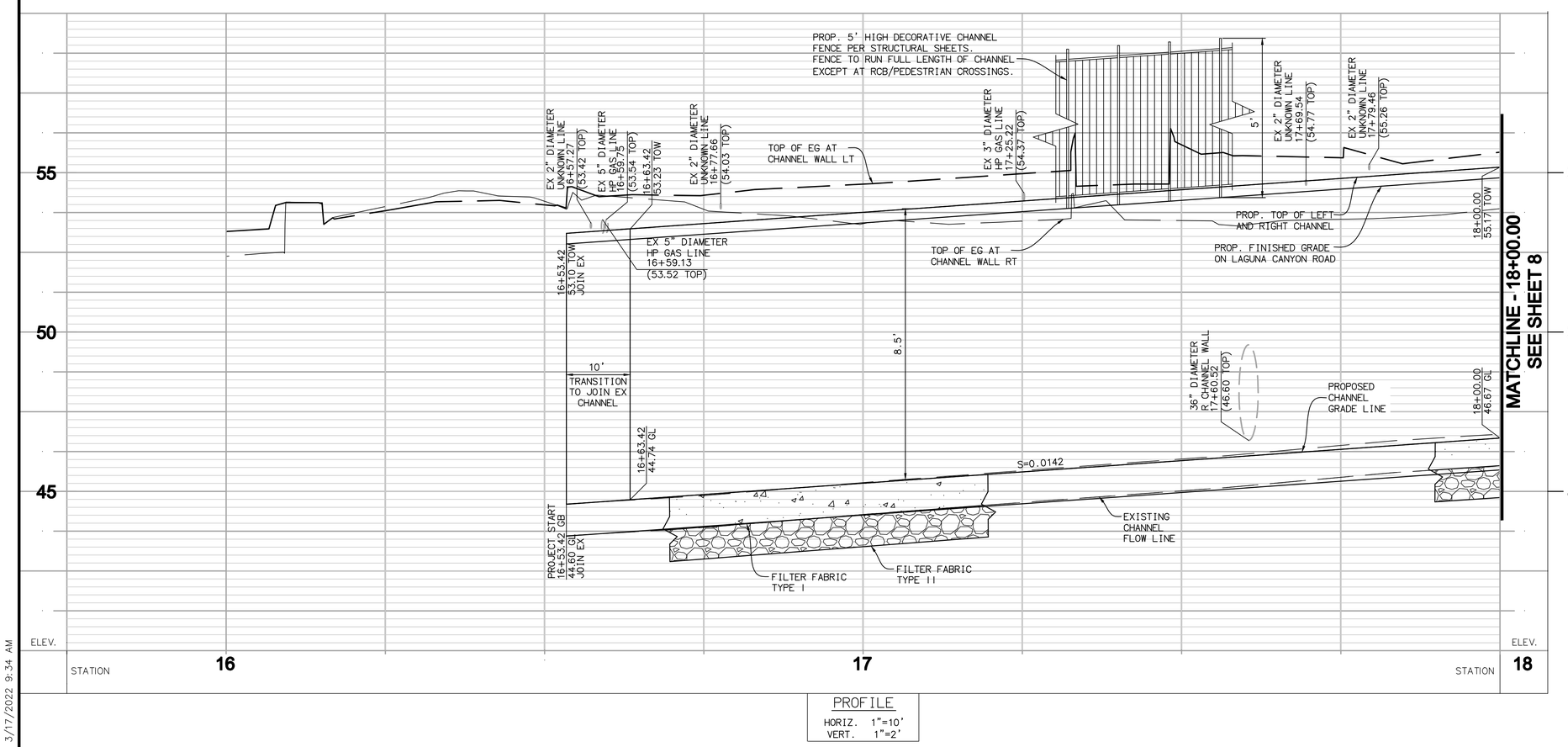


PROFILE
HORIZ. 1"=10'
VERT. 1"=2'

## CONSTRUCTION NOTES

1. CONSTRUCT 4" THICK PCC SIDEWALK PER OCPW STD. PLAN 112-2. INTEGRAL COLOR AND SURFACE RETARDER PER THE SPECIFICATIONS.
2. CONSTRUCT SIDEWALK RAMP PER CALTRANS STD. PLAN RSP A88A, CASE C WITH DETECTABLE WARNING SURFACE, MODIFIED PER DETAIL ON SHEETS 14 & 15.
3. CONSTRUCT 6" CURB AND GUTTER PER OCPW STD. PLAN 120-2, TYPE A2-6 (150) (W=18").
4. CONSTRUCT PARKING METER FOUNDATION PER CITY OF LAGUNA BEACH STD. DETAIL 641-O.
5. CONSTRUCT 8" CURB PER OCPW STD. PLAN 120-2, TYPE A1-8 (200).
9. CONSTRUCT CONCRETE CHANNEL PER STRUCTURAL DETAILS ON SHEETS 17, 18, 19 & 20.
12. CONSTRUCT 4" THICK PCC PAVING.
13. CONSTRUCT JUNCTION STRUCTURE - PIPE TO RCB PER SPPWC STD. PLAN 333-2 (VALUES FOR A,B & C SHOWN ON PLAN).
14. REINSTALL SALVAGED TRAFFIC SIGN.
16. CONSTRUCT 5' HIGH DECORATIVE CHANNEL FENCE PER STRUCTURAL DETAILS ON SHEETS 19 & 20.
17. CONSTRUCT SIDEWALK RAMP PER CALTRANS STD. PLAN RSP A88A, CASE G WITH DETECTABLE WARNING SUFACE, MODIFIED PER DETAIL ON SHEETS 14 & 15.
18. CONSTRUCT 18" MAX RETAINING CURB AND RAILING PER STRUCTURAL DETAIL ON SHEET 21.
19. CONSTRUCT 5' HIGH CHAIN LINK FENCE PER OCPW STD. PLAN 600-3.
20. CONSTRUCT LOCAL DEPRESSION PER OCPW STD. PLAN 1308.
21. CONSTRUCT CROSS GUTTER AND SPANDREL PER SPPWC STD. PLAN 122-2.
22. CONSTRUCT 1.2' HMA / 0.5' AS CLASS 2.
23. CONSTRUCT 4" AC PAVEMENT ON 6" AB.

LINE/CURVE DATA TABLE

| | NO | BEARING/DELTA | RADIUS | LENGTH | TANGENT |
|---|---|---|---|---|---|
| TOTAL | 1 | N 47°38'05" E | -- | 1407.60' | -- |
| | 2 | 66°25'31" | 30.00' | 34.78' | 19.64' |
| | 3 | N 47°38'05" E | -- | 43.47' | -- |
| | 4 | 66°22'30" | 30.00' | 34.75' | 19.62' |
| | 5 | N 47°01'02" E | -- | 99.91' | -- |
| | 6 | N 49°46'08" W | -- | 5.22' | -- |
| TOTAL | 7 | 07°17'06" | 865.81' | 110.09' | 55.12' |

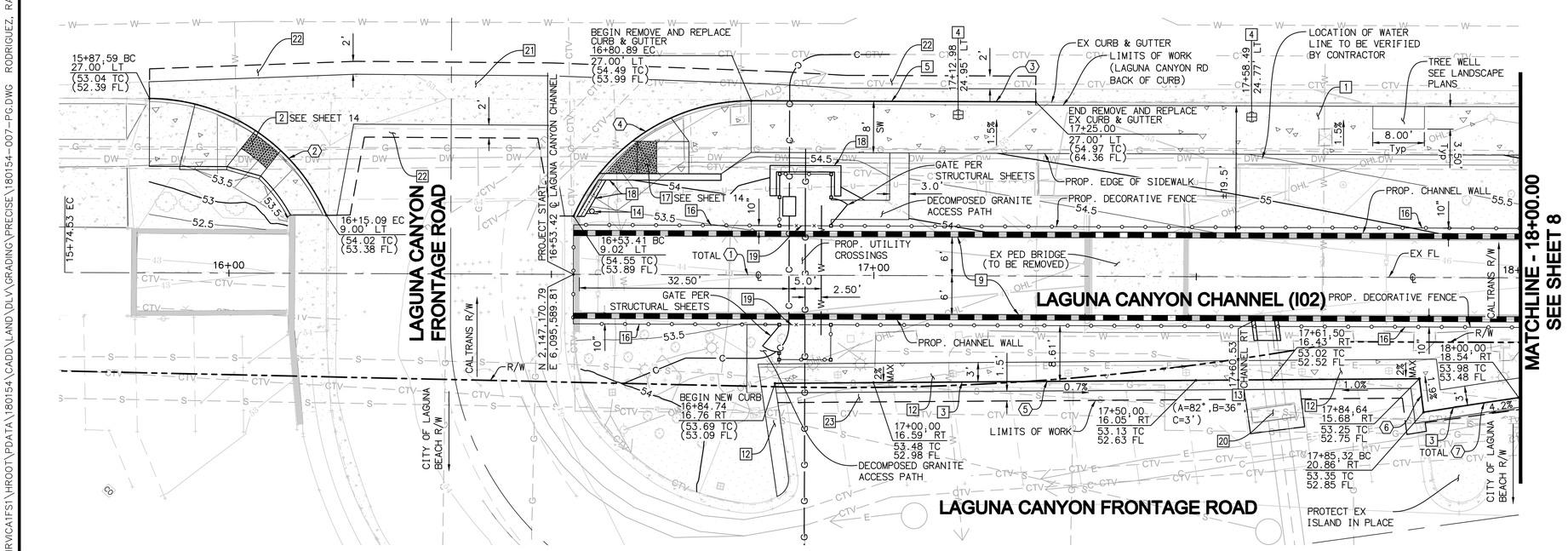


## LEGEND

- 1 PROPOSED CONCRETE SIDEWALK

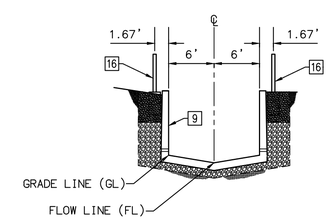


STA 16+53.42 TO STA 18+00.00

**CONCRETE CHANNEL TYPICAL SECTION**

NOT TO SCALE

SCALE 1"=10'

10 5 0 10 20 30

SCALE: 1"=10'

COUNTY OF ORANGE CALIFORNIA

| MARK | DESCRIPTION | DATE | APPR. |
|---|---|---|---|

PREPARED UNDER THE RESPONSIBLE CHARGE OF:
REGISTERED PROFESSIONAL ENGINEER DAVID EAMES No. 55501 CIVIL STATE OF CALIFORNIA
02/28/22 DATE
DAVID EAMES, P.E.

DESIGNED BY: FT
DRAWN BY: RR
CHECKED BY: DE
DRAWING NUMBER:
County of Orange OC Public Works
PREPARED BY: Michael Baker INTERNATIONAL
5 Hutton Centre Drive, Suite 500, Santa Ana, CA 92707 Phone: (949) 472-3505 - MBAKERINTL.COM
FILE NAME: XXXXXXXXXXXXXXXXXXXX
PLOT DATE: 02/28/2022
SCALE: AS SHOWN

LAGUNA CANYON CHANNEL REPLACEMENT
**OCFCD FACILITY NO. I02**
PROPOSED CHANNEL PLAN/PROFILE
STA:15+70.27 TO 18+00.00

SHEET 7
SHEET 7 OF 41



EXHIBIT B

\\RIVCIAITS1\HROOT\PDATA\180154\CADD\LAND\DLV\GRADING\PRECISE\180154-007-PG.DWG RODRIGUEZ, RAUL 3/17/2022 9:34 AM

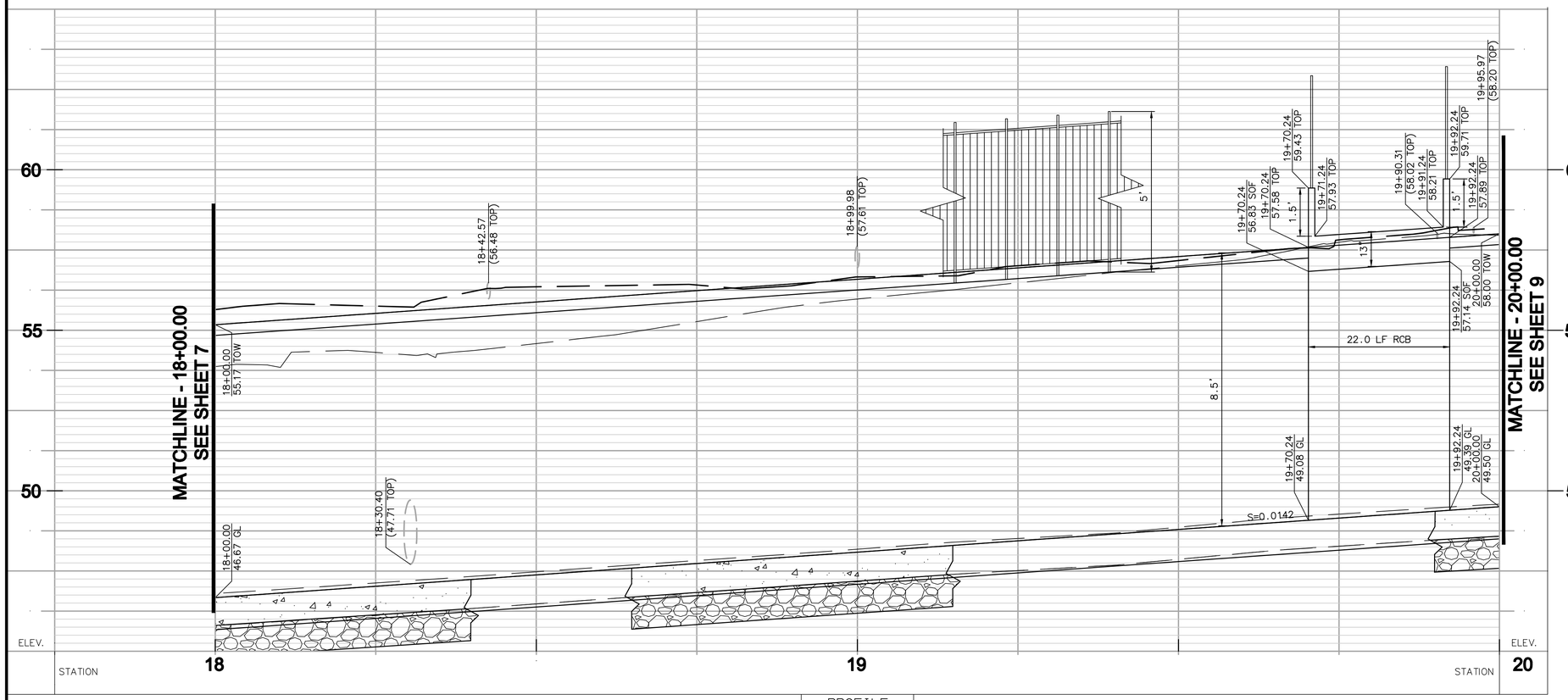


PROFILE
HORIZ. 1"=10'
VERT. 1"=2'

## CONSTRUCTION NOTES

1. CONSTRUCT 4" THICK PCC SIDEWALK PER OCPW STD. PLAN 112-2. INTEGRAL COLOR AND SURFACE RETARDER PER THE SPECIFICATIONS.
3. CONSTRUCT 6" CURB AND GUTTER PER OCPW STD. PLAN 120-2, TYPE A2-6 (150) (W=18").
4. CONSTRUCT PARKING METER FOUNDATION PER CITY OF LAGUNA BEACH STD. DETAIL 641-0.
6. INSTALL SALVAGED STREET LIGHT. (TO BE FURNISHED BY THE CITY OF LAGUNA BEACH).
8. CONSTRUCT PEDESTRIAN BRIDGE PER STRUCTURAL DETAIL ON SHEETS 8, 14, 15, 18 & 20.
9. CONSTRUCT CONCRETE CHANNEL PER STRUCTURAL DETAILS ON SHEETS 17, 18, 19 & 20.
11. CONSTRUCT SIDEWALK RAMP PER CALTRANS STD. PLAN RSP A88A, CASE A WITH DETECTABLE WARNING SURFACE, MODIFIED PER DETAIL ON SHEETS 14 & 15.
12. CONSTRUCT 4" THICK PCC PAVING.
13. CONSTRUCT JUNCTION STRUCTURE - PIPE TO RCB PER SPPWC STD. PLAN 333-2 (VALUES FOR A,B & C SHOWN ON PLAN).
16. CONSTRUCT 5' HIGH DECORATIVE CHANNEL FENCE PER STRUCTURAL DETAILS ON SHEETS 19 & 20.
23. CONSTRUCT 4" AC PAVEMENT ON 6" AB.

LINE/CURVE DATA TABLE

| | NO. | BEARING/DELTA | RADIUS | LENGTH | TANGENT |
|---|---|---|---|---|---|
| TOTAL | 1 | N 47°38'05" E | -- | 1407.60' | -- |
| TOTAL | 7 | 07°17'06" | 865.81' | 110.09' | 55.12' |
| | 8 | N 47°38'05" E | | 68.05' | -- |
| | 9 | 54°34'21" | 7.00' | 6.67' | 3.61' |
| | 10 | 54°48'54" | 10.00' | 9.57' | 5.19' |
| | 11 | N 47°23'37" E | -- | 8.65' | -- |
| | 12 | 54°32'01" | 10.00' | 9.52' | 5.15' |
| | 13 | 54°46'33" | 7' | 6.69' | 15.86' |

## LEGEND

- 1 PROPOSED CONCRETE SIDEWALK

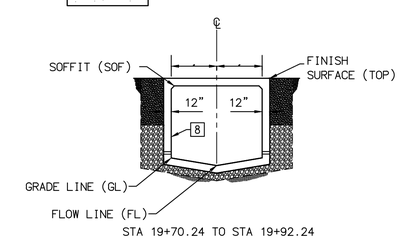


STA 19+70.24 TO STA 19+92.24

**RCB CONCRETE CHANNEL TYPICAL SECTION**

NOT TO SCALE

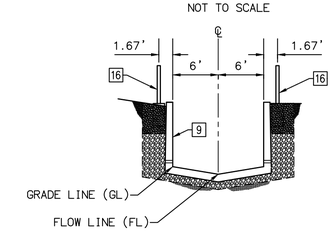


STA 18+00.00 TO STA 19+70.24
STA 19+92.24 TO STA 20+00.00

**CONCRETE CHANNEL TYPICAL SECTION**

NOT TO SCALE

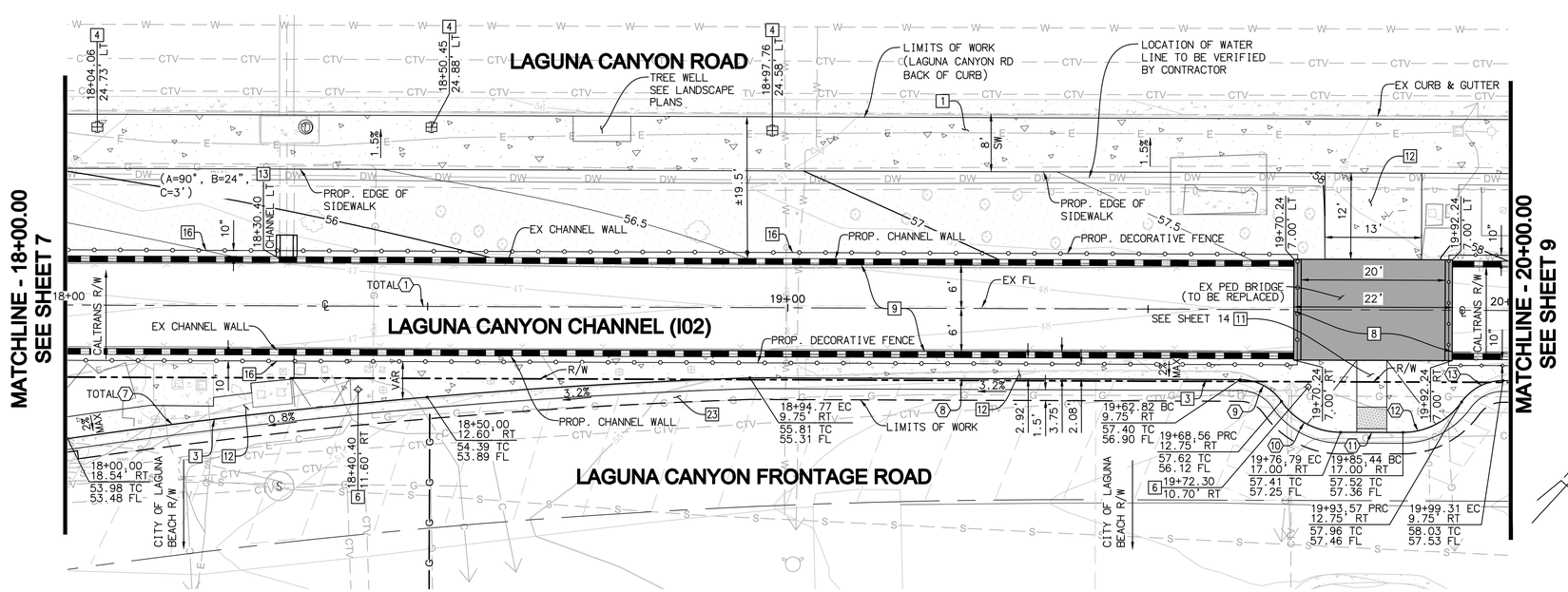


SCALE: 1"=10'

PREPARED UNDER THE RESPONSIBLE CHARGE OF:
DAVID EAMES, P.E.
DATE 02/28/22

| MARK | DESCRIPTION | DATE | APPR. |
|---|---|---|---|

DESIGNED BY: FT
DRAWN BY: RR
CHECKED BY: DE
DRAWING NUMBER:
FILE NAME: XXXXXXXXXXXXXXXXXXX
PLOT DATE: 02/28/2022
SCALE: AS SHOWN

County of Orange OC Public Works

PREPARED BY: Michael Baker INTERNATIONAL
5 Hutton Centre Drive, Suite 500, Santa Ana, CA 92707
Phone: (949) 472-3505 · MBAKERINTL.COM

LAGUNA CANYON CHANNEL REPLACEMENT
OCFCD FACILITY NO. I02

PROPOSED CHANNEL PLAN/PROFILE
STA:18+00.00 TO 20+00.00

SHEET 8
SHEET 8 OF 41



EXHIBIT B

\\RVCA1FS1\HROOT\PDATA\180154\CADD\LAND\DLV\GRADING\PRECISE\180154-008-PG.DWG RODRIGUEZ, RAUL 3/17/2022 9:34 AM

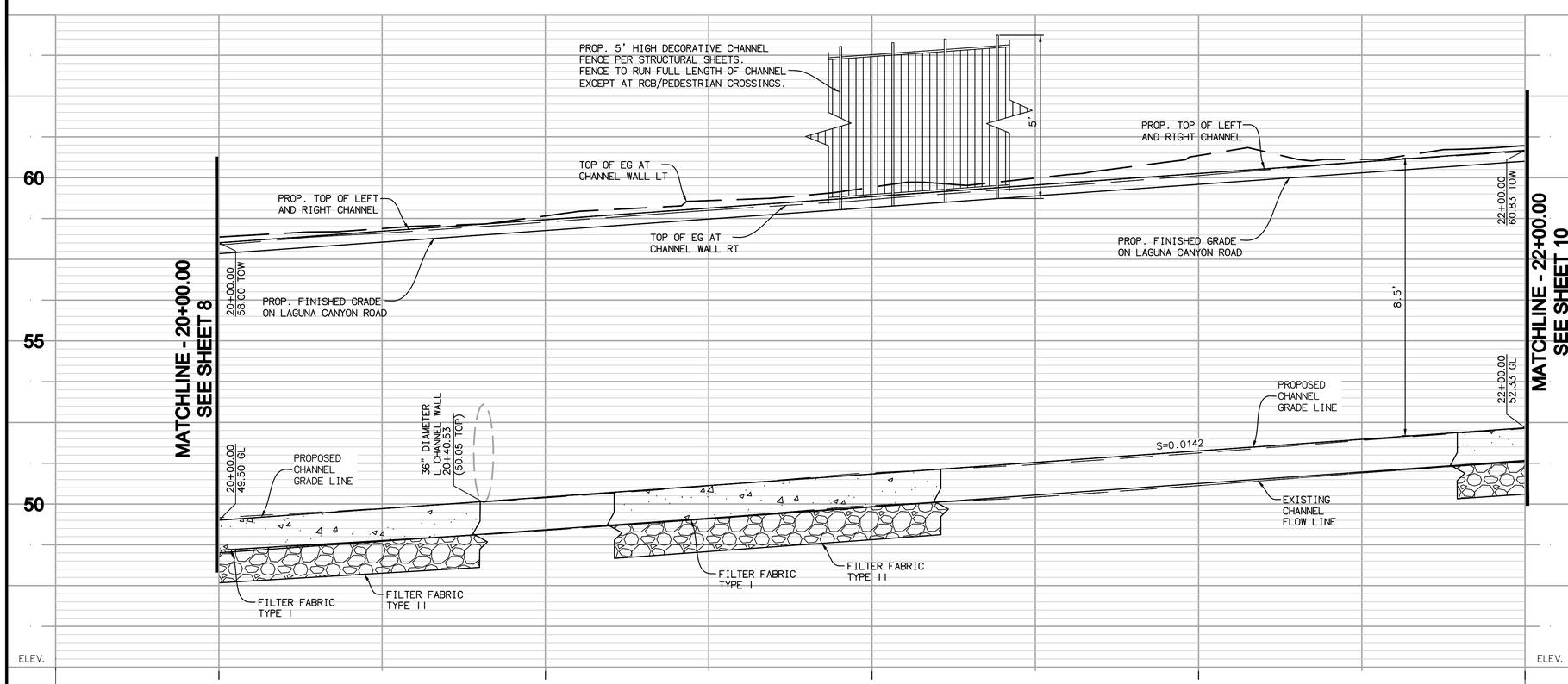


PROFILE
HORIZ. 1"=10'
VERT. 1"=2'

## CONSTRUCTION NOTES

1. CONSTRUCT 4" THICK PCC SIDEWALK PER OCPW STD. PLAN 112-2. INTEGRAL COLOR AND SURFACE RETARDER PER THE SPECIFICATIONS.
3. CONSTRUCT 6" CURB AND GUTTER PER OCPW STD. PLAN 120-2, TYPE A2-6 (150) (W=18").
4. CONSTRUCT PARKING METER FOUNDATION PER CITY OF LAGUNA BEACH STD. DETAIL 641-0.
6. INSTALL SALVAGED STREET LIGHT. (TO BE FURNISHED BY THE CITY OF LAGUNA BEACH).
9. CONSTRUCT CONCRETE CHANNEL PER STRUCTURAL DETAILS ON SHEETS 17, 18, 19 & 20.
12. CONSTRUCT 4" THICK PCC PAVING.
13. CONSTRUCT JUNCTION STRUCTURE - PIPE TO RCB PER SPPWC STD. PLAN 333-2 (VALUES FOR A,B & C SHOWN ON PLAN).
16. CONSTRUCT 5' HIGH DECORATIVE CHANNEL FENCE PER STRUCTURAL DETAILS ON SHEETS 19 & 20.
23. CONSTRUCT 4" AC PAVEMENT ON 6" AB.

LINE/CURVE DATA TABLE

| | NO. | BEARING/DELTA | RADIUS | LENGTH | TANGENT |
|---|---|---|---|---|---|
| TOTAL | 1 | N 47°55'17" E | -- | 1407.60' | -- |
| TOTAL | 14 | N 47°38'05" E | -- | 523.57' | -- |

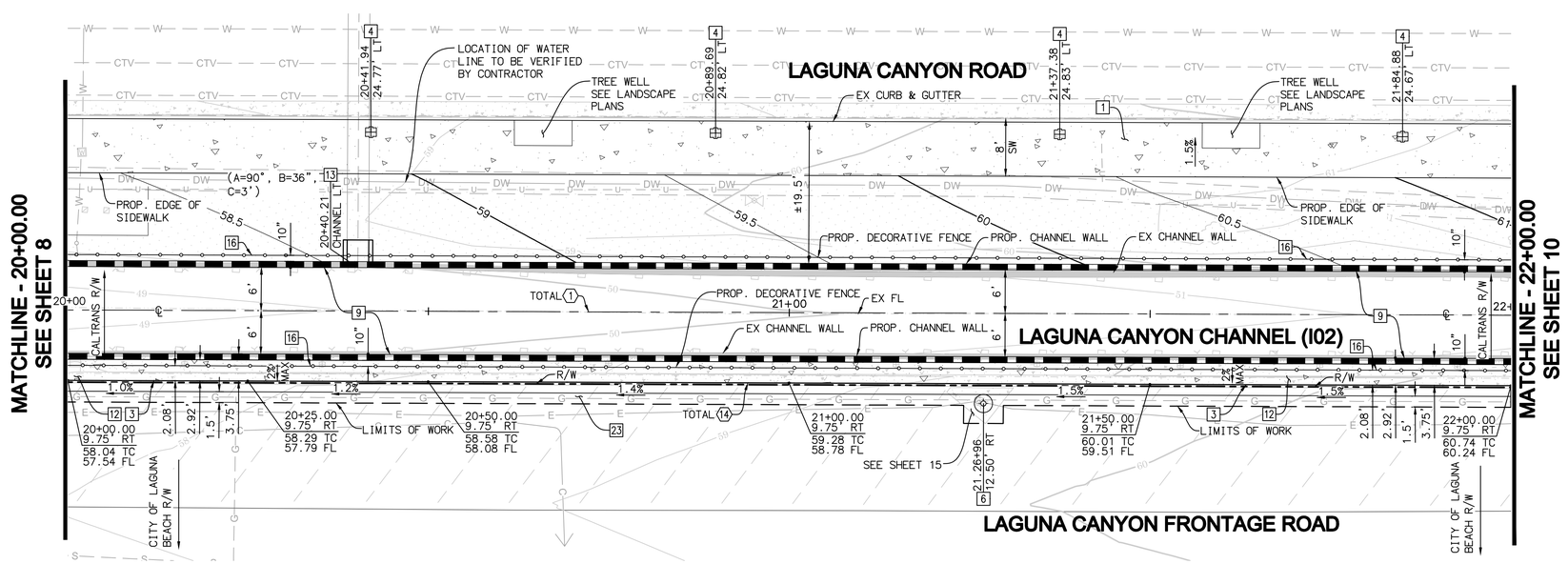


## LEGEND

1 PROPOSED CONCRETE SIDEWALK

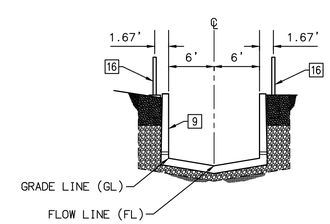


STA 20+00.00 TO STA 22+00.00

**CONCRETE CHANNEL TYPICAL SECTION**

NOT TO SCALE

SCALE 1"=10'

10 5 0 10 20 30

SCALE: 1"=10'

| MARK | DESCRIPTION | DATE | APPR. |
|---|---|---|---|
| | | | |

PREPARED UNDER THE RESPONSIBLE CHARGE OF:

REGISTERED PROFESSIONAL ENGINEER DAVID EAMES No. 55501 CIVIL STATE OF CALIFORNIA

02/28/22 DATE

DAVID EAMES, P.E.

DESIGNED BY: FT
DRAWN BY: RR
CHECKED BY: DE
DRAWING NUMBER:
FILE NAME: XXXXXXXXXXXXXXXXXX
PLOT DATE: 02/28/2022
SCALE: AS SHOWN

County of Orange OC Public Works

PREPARED BY: Michael Baker INTERNATIONAL
5 Hutton Centre Drive, Suite 500, Santa Ana, CA 92707
Phone: (949) 472-3505 - MBAKERINTL.COM

LAGUNA CANYON CHANNEL REPLACEMENT
**OCFCD FACILITY NO. I02**

PROPOSED CHANNEL PLAN/PROFILE
STA:20+00.00 TO 22+00.00

SHEET 9 OF 41



EXHIBIT B

\\RIVCIAITS1\HROOT\PDATA\180154\CADD\LAND\DLV\GRADING\PRECISE\180154-009-PG.DWG RODRIGUEZ, RAUL 3/17/2022 9:35 AM

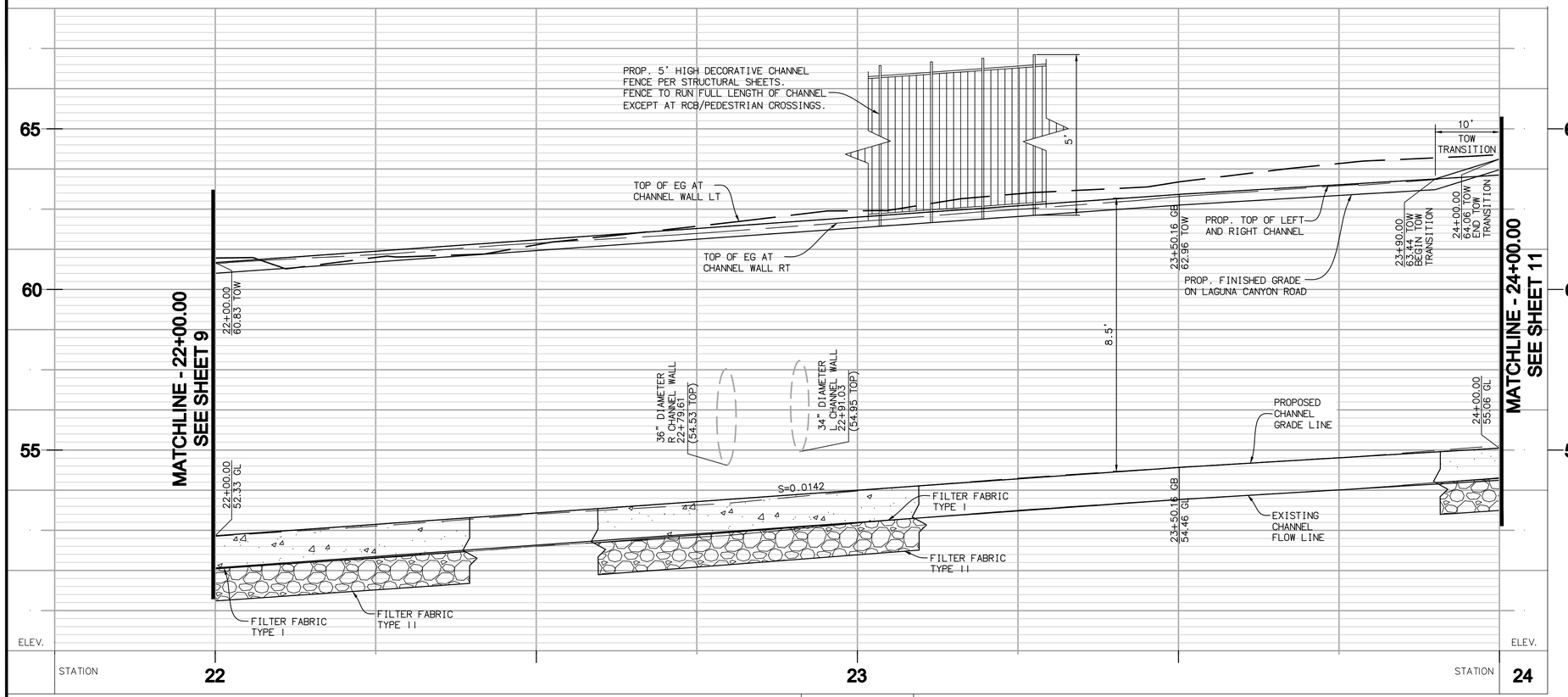


PROFILE
HORIZ. 1"=10'
VERT. 1"=2'

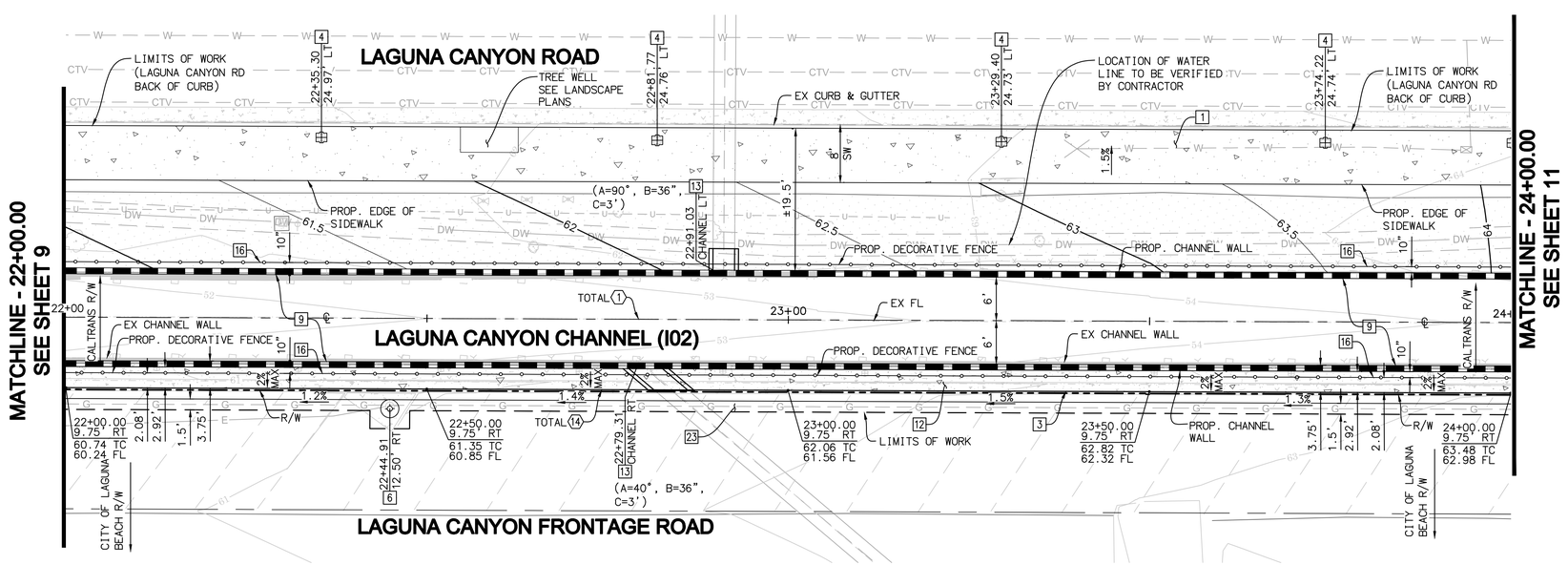


## CONSTRUCTION NOTES

1. CONSTRUCT 4" THICK PCC SIDEWALK PER OCPW STD. PLAN 112-2. INTEGRAL COLOR AND SURFACE RETARDER PER THE SPECIFICATIONS.
3. CONSTRUCT 6" CURB AND GUTTER PER OCPW STD. PLAN 120-2, TYPE A2-6 (150) (W=18").
4. CONSTRUCT PARKING METER FOUNDATION PER CITY OF LAGUNA BEACH STD. DETAIL 641-0.
6. INSTALL SALVAGED STREET LIGHT. (TO BE FURNISHED BY THE CITY OF LAGUNA BEACH).
9. CONSTRUCT CONCRETE CHANNEL PER STRUCTURAL DETAILS ON SHEETS 17, 18, 19 & 20.
12. CONSTRUCT 4" THICK PCC PAVING.
13. CONSTRUCT JUNCTION STRUCTURE - PIPE TO RCB PER SPPWC STD. PLAN 333-2 (VALUES FOR A,B & C SHOWN ON PLAN).
16. CONSTRUCT 5' HIGH DECORATIVE CHANNEL FENCE PER STRUCTURAL DETAILS ON SHEETS 19 & 20.
23. CONSTRUCT 4" AC PAVEMENT ON 6" AB.

LINE/CURVE DATA TABLE

| | NO. | BEARING/DELTA | RADIUS | LENGTH | TANGENT |
|---|---|---|---|---|---|
| TOTAL | 1 | N 47°55'17" E | -- | 1407.60' | -- |
| TOTAL | 14 | N 47°38'05" E | -- | 523.57' | -- |

## LEGEND

1 PROPOSED CONCRETE SIDEWALK

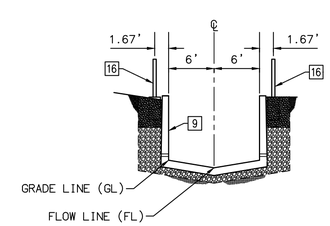


STA 22+00.00 TO STA 24+00.00

## CONCRETE CHANNEL TYPICAL SECTION

NOT TO SCALE

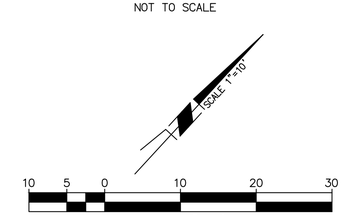


SCALE: 1"=10'

| MARK | DESCRIPTION | DATE | APPR. |
|---|---|---|---|
| | | | |

PREPARED UNDER THE RESPONSIBLE CHARGE OF:
REGISTERED PROFESSIONAL ENGINEER DAVID EAMES No. 55501 CIVIL STATE OF CALIFORNIA
02/28/22 DATE
DAVID EAMES, P.E.

DESIGNED BY: FT
DRAWN BY: RR
CHECKED BY: DE
DRAWING NUMBER:
FILE NAME: XXXXXXXXXXXXXXXXXX
PLOT DATE: 02/28/2022
SCALE: AS SHOWN

County of Orange OC Public Works

PREPARED BY: Michael Baker INTERNATIONAL
5 Hutton Centre Drive, Suite 500, Santa Ana, CA 92707
Phone: (949) 472-3505 · MBAKERINTL.COM

LAGUNA CANYON CHANNEL REPLACEMENT
OCFCD FACILITY NO. I02

PROPOSED CHANNEL PLAN/PROFILE
STA:22+00.00 TO 24+00.00

SHEET 10
SHEET 10 OF 41

\\RIVCAIFS1\HROOT\PDATA\180154\CADD\LAND\DLV\GRADING\PRECISE\180154-010-PG.DWG RODRIGUEZ, RAUL 3/17/2022 9:36 AM



EXHIBIT B

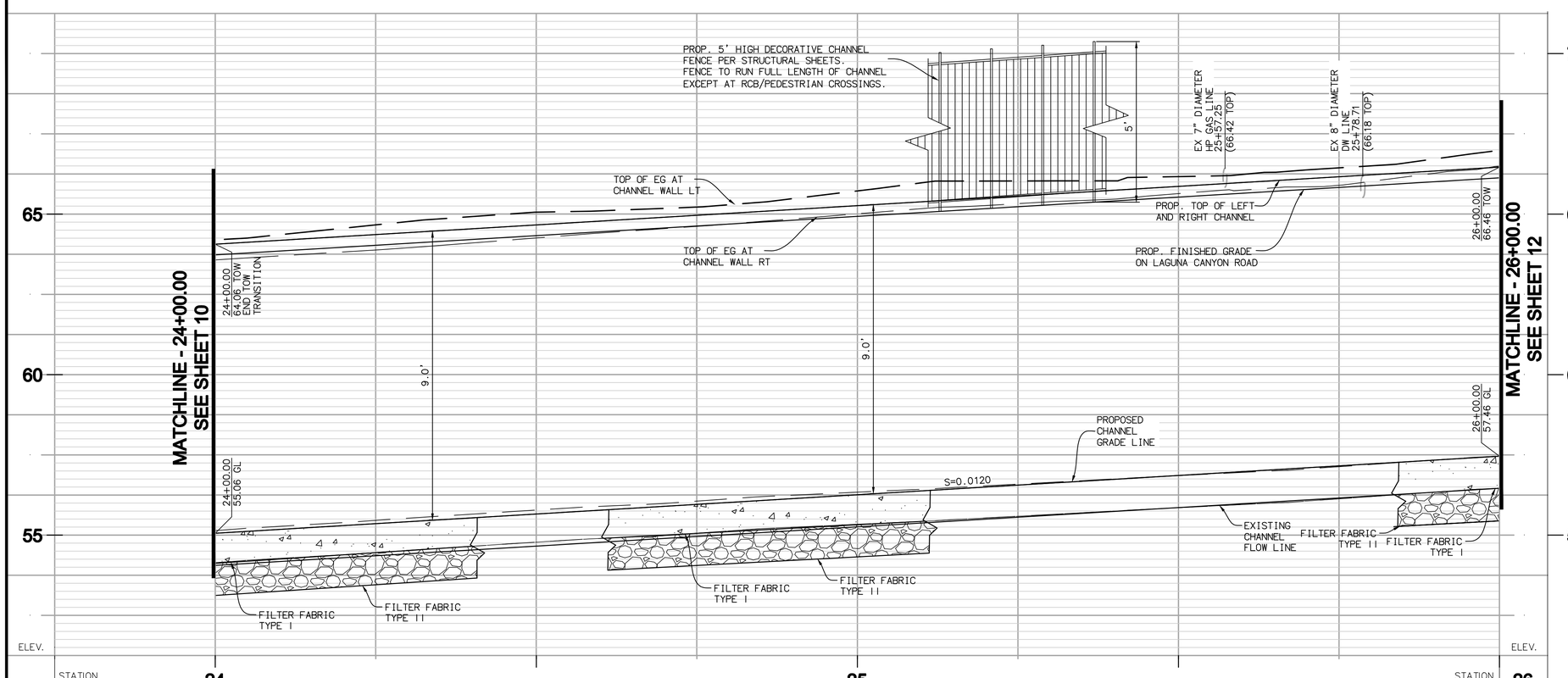


PROFILE
HORIZ. 1"=10'
VERT. 1"=2'

## CONSTRUCTION NOTES

1. CONSTRUCT 4" THICK PCC SIDEWALK PER OCPW STD. PLAN 112-2. INTEGRAL COLOR AND SURFACE RETARDER PER THE SPECIFICATIONS.
3. CONSTRUCT 6" CURB AND GUTTER PER OCPW STD. PLAN 120-2, TYPE A2-6 (150) (W=18").
4. CONSTRUCT PARKING METER FOUNDATION PER CITY OF LAGUNA BEACH STD. DETAIL 641-0.
9. CONSTRUCT CONCRETE CHANNEL PER STRUCTURAL DETAILS ON SHEETS 17, 18, 19 & 20.
12. CONSTRUCT 4" THICK PCC PAVING.
14. REINSTALL SALVAGED TRAFFIC SIGN.
16. CONSTRUCT 5' HIGH DECORATIVE CHANNEL FENCE PER STRUCTURAL DETAILS ON SHEETS 19 & 20.
23. CONSTRUCT 4" AC PAVEMENT ON 6" AB.

LINE/CURE DATA TABLE

| | NO | BEARING/DELTA | RADIUS | LENGTH | TANGENT |
|---|---|---|---|---|---|
| TOTAL | 1 | N 47°55'17" E | -- | 1407.60' | -- |
| TOTAL | 14 | N 47°38'05" E | -- | 523.57' | -- |
| | 15 | 05°39'60" | 500.00' | 49.45' | 24.76' |
| | 16 | N 52°56'28" E | -- | 24.85' | -- |
| | 17 | N 54°22'58" E | -- | 23.95' | -- |

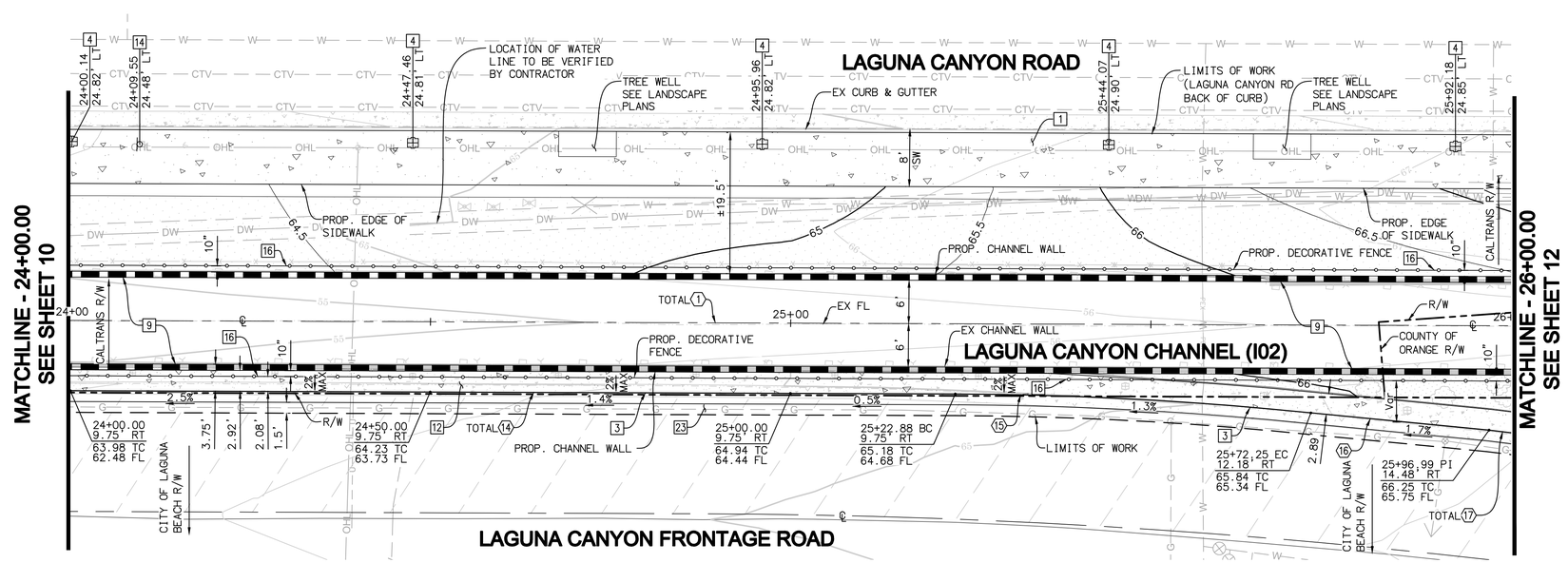


## LEGEND

1 PROPOSED CONCRETE SIDEWALK

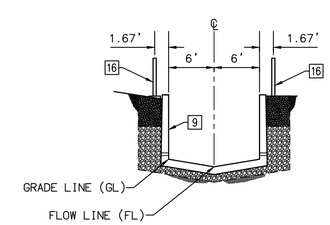


STA 24+00.00 TO STA 26+00.00

**CONCRETE CHANNEL TYPICAL SECTION**

NOT TO SCALE

SCALE: 1"=10'

| MARK | DESCRIPTION | DATE | APPR. |
|---|---|---|---|
| | | | |

PREPARED UNDER THE RESPONSIBLE CHARGE OF:
DAVID EAMES, P.E.
02/28/22 DATE

DESIGNED BY: FT
DRAWN BY: RR
CHECKED BY: DE
DRAWING NUMBER:
FILE NAME: XXXXXXXXXXXXXXXXXX
PLOT DATE: 02/28/2022
SCALE: AS SHOWN

County of Orange Public Works

PREPARED BY: Michael Baker INTERNATIONAL
5 Hutton Centre Drive, Suite 500, Santa Ana, CA 92707
Phone: (949) 472-3505 - MBAKERINTL.COM

LAGUNA CANYON CHANNEL REPLACEMENT
**OCFCD FACILITY NO. I02**

PROPOSED CHANNEL PLAN/PROFILE
STA:24+00.00 TO 26+00.00

SHEET 11 OF 41



EXHIBIT B

\\RIVCIAFS1\HROOT\PDATA\180154\CADD\LAND\DLV\GRADING\PRECISE\180154-011-PG.DWG RODRIGUEZ, RAUL 3/17/2022 9:36 AM

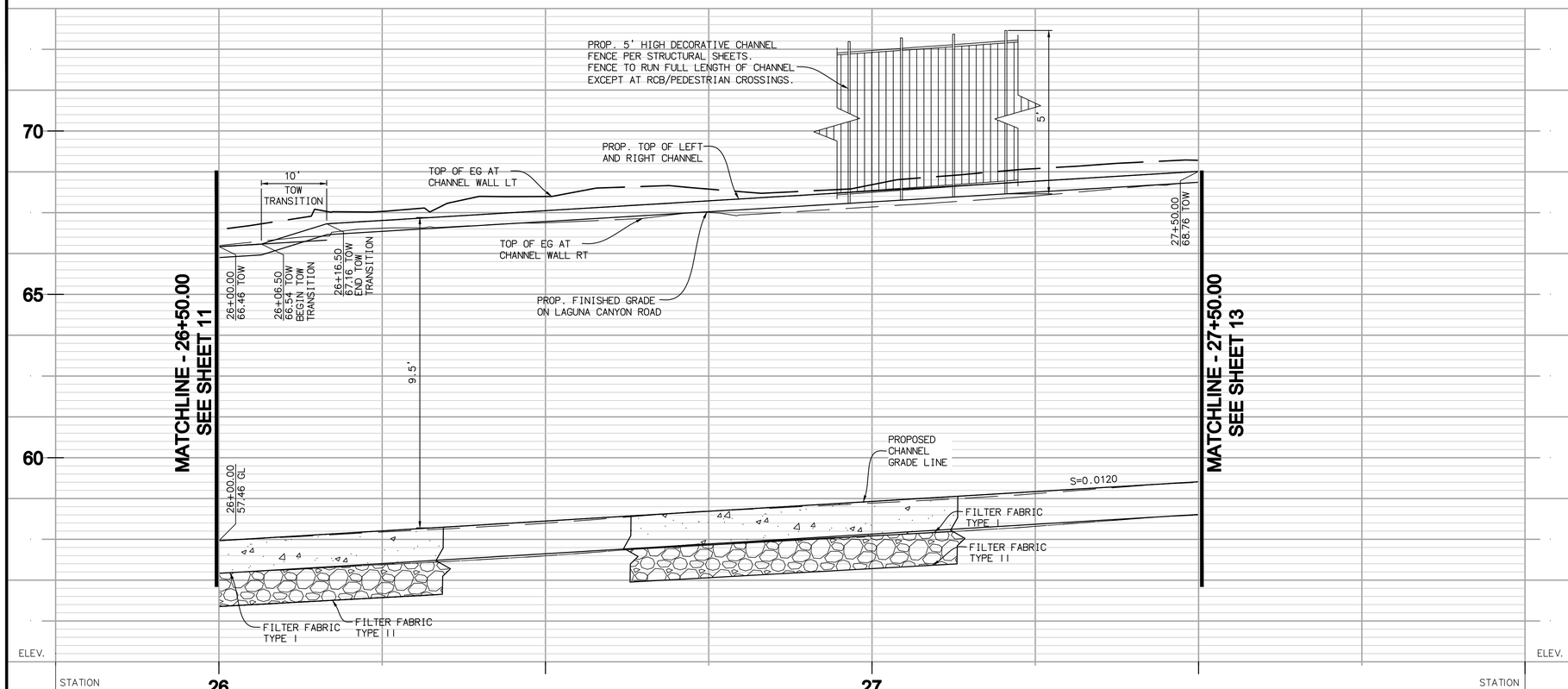


PROFILE
HORIZ. 1"=10'
VERT. 1"=2'

## CONSTRUCTION NOTES

1. CONSTRUCT 4" THICK PCC SIDEWALK PER OCPW STD. PLAN 112-2. INTEGRAL COLOR AND SURFACE RETARDER PER THE SPECIFICATIONS.
3. CONSTRUCT 6" CURB AND GUTTER PER OCPW STD. PLAN 120-2, TYPE A2-6 (150) (W=18").
4. CONSTRUCT PARKING METER FOUNDATION PER CITY OF LAGUNA BEACH STD. DETAIL 641-0.
9. CONSTRUCT CONCRETE CHANNEL PER STRUCTURAL DETAILS ON SHEETS 17, 18, 19 & 20.
12. CONSTRUCT 4" THICK PCC PAVING.
14. REINSTALL SALVAGED TRAFFIC SIGN.
16. CONSTRUCT 5' HIGH DECORATIVE CHANNEL FENCE PER STRUCTURAL DETAILS ON SHEETS 19 & 20.
23. CONSTRUCT 4" AC PAVEMENT ON 6" AB.

LINE/CURVE DATA TABLE

| | NO. | BEARING/DELTA | RADIUS | LENGTH | TANGENT |
|---|---|---|---|---|---|
| TOTAL | 1 | N 47°38'05" E | -- | 1407.60' | -- |
| TOTAL | 17 | N 54°22'58" E | -- | 23.95' | -- |
| | 18 | N 54°53'54" E | -- | 27.03' | -- |
| | 19 | N 54°46'53" E | -- | 25.08' | -- |
| | 20 | N 54°56'42" E | -- | 22.58' | -- |
| | 21 | N 54°53'23" E | -- | 46.91' | -- |
| TOTAL | 22 | N 54°40'59" E | -- | 21.53' | -- |

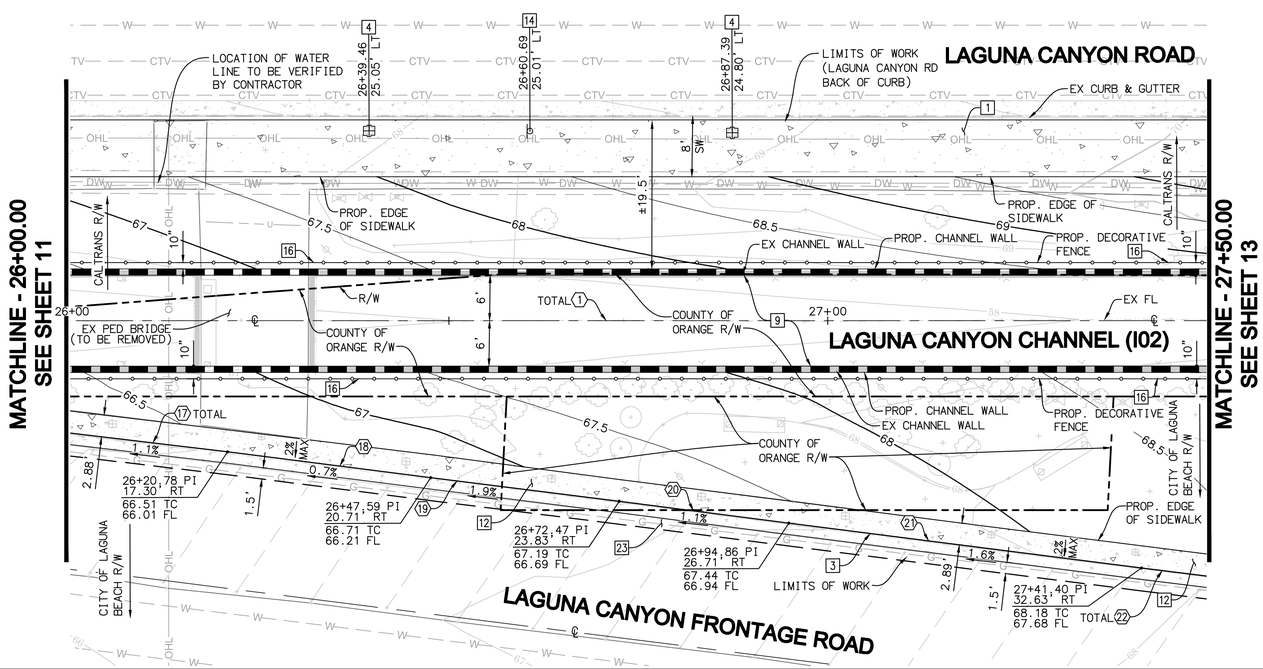


## LEGEND

1 PROPOSED CONCRETE SIDEWALK

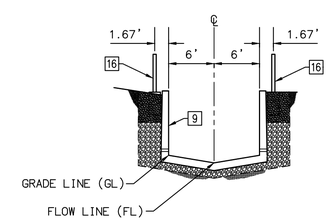


STA 26+00.00 TO STA 27+50.00

**CONCRETE CHANNEL TYPICAL SECTION**

NOT TO SCALE

SCALE 1"=10'

10 5 0 10 20 30

SCALE: 1"=10'

COUNTY OF ORANGE CALIFORNIA

| MARK | DESCRIPTION | DATE | APPR. |
|---|---|---|---|

PREPARED UNDER THE RESPONSIBLE CHARGE OF:
REGISTERED PROFESSIONAL ENGINEER DAVID EAMES No. 55501 CIVIL STATE OF CALIFORNIA
02/28/22 DATE
DAVID EAMES, P.E.

DESIGNED BY: FT
DRAWN BY: RR
CHECKED BY: DE
DRAWING NUMBER:
FILE NAME: XXXXXXXXXXXXXXXXXX
PLOT DATE: 02/28/2022
SCALE: AS SHOWN

County of Orange
OC Public Works

PREPARED BY:
Michael Baker INTERNATIONAL
5 Hutton Centre Drive, Suite 300, Santa Ana, CA 92707
Phone: (949) 472-3505 - MBAKERINTL.COM

LAGUNA CANYON CHANNEL REPLACEMENT
**OCFCD FACILITY NO. I02**

PROPOSED CHANNEL PLAN/PROFILE
STA:26+00.00 TO 27+50.00

SHEET
12
SHEET 12 OF 41



EXHIBIT B

\\RIVCA1FS1\HROOT\PDATA\180154\CADD\LAND\DLV\GRADING\PRECISE\180154-012-PG.DWG RODRIGUEZ, RAUL 3/17/2022 9:37 AM

PROFILE
HORIZ. 1"=10'
VERT. 1"=2'

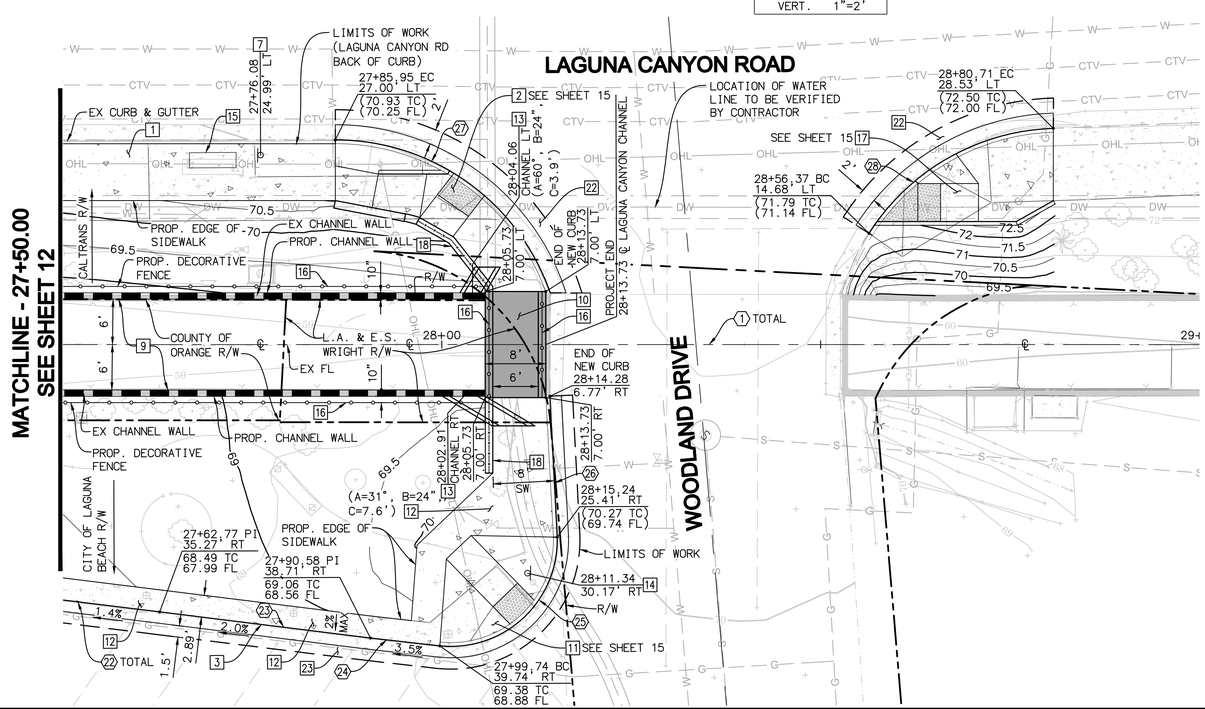


## CONSTRUCTION NOTES

1. CONSTRUCT 4" THICK PCC SIDEWALK PER OCPW STD. PLAN 112-2. INTEGRAL COLOR AND SURFACE RETARDER PER THE SPECIFICATIONS.
2. CONSTRUCT SIDEWALK RAMP PER CALTRANS STD. PLAN RSP A88A, CASE C WITH DETECTABLE WARNING SURFACE, MODIFIED PER DETAIL ON SHEETS 14 & 15.
3. CONSTRUCT 6" CURB AND GUTTER PER OCPW STD. PLAN 120-2, TYPE A2-6 (150) (W=18").
7. INSTALL SALVAGED BUS STOP SIGN.
9. CONSTRUCT CONCRETE CHANNEL PER STRUCTURAL DETAILS ON SHEETS 17, 18, 19 & 20.
10. CONSTRUCT RCB EXTENSION PER STRUCTURAL DETAILS ON SHEETS 8, 14, 15, 18 & 20.
11. CONSTRUCT SIDEWALK RAMP PER CALTRANS STD. PLAN RSP A88A, CASE A WITH DETECTABLE WARNING SURFACE, MODIFIED PER DETAIL ON SHEETS 14 & 15.
12. CONSTRUCT 4" THICK PCC PAVING.
13. CONSTRUCT JUNCTION STRUCTURE - PIPE TO RCB PER SPPWC STD. PLAN 333-2 (VALUES FOR A,B & C SHOWN ON PLAN).
14. REINSTALL SALVAGED TRAFFIC SIGN.
15. INSTALL SALVAGED BENCH.
16. CONSTRUCT 5' HIGH DECORATIVE CHANNEL FENCE PER STRUCTURAL DETAILS ON SHEETS 19 & 20.
17. CONSTRUCT SIDEWALK RAMP PER CALTRANS STD. PLAN RSP A88A, CASE G WITH DETECTABLE WARNING SUFACE, MODIFIED PER DETAIL ON SHEETS 14 & 15.
18. CONSTRUCT 18" MAX RETAINING CURB AND RAILING PER STRUCTURAL DETAIL ON SHEET 21.
22. CONSTRUCT 1.2' HMA / 0.5' AS CLASS 2.
23. CONSTRUCT 4" AC PAVEMENT ON 6" AB.

LINE/CURVE DATA TABLE

| | NO. | BEARING/DELTA | RADIUS | LENGTH | TANGENT |
|---|---|---|---|---|---|
| TOTAL | 1 | N 47°38'05" E | -- | 1407.60' | -- |
| TOTAL | 22 | N 54°40'59" E | -- | 21.53' | -- |
| | 23 | N 54°41'05" E | -- | 28.03' | -- |
| | 24 | N 54°04'13" E | -- | 9.22' | -- |
| | 25 | 97°52'52" | 14.00' | 23.92' | 16.07' |
| | 26 | N 45°21'28" W | -- | 18.62' | -- |
| | 27 | 70°53'08" | 30.00' | 37.12' | 21.36' |
| | 28 | 55°38'15" | 30.00' | 29.13' | 15.83' |

## LEGEND

- 1 PROPOSED CONCRETE SIDEWALK

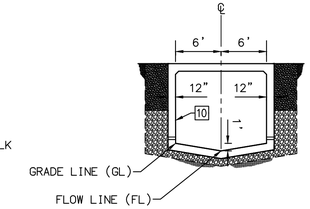


STA 28+05.73 TO STA 28+13.73

**RCB CONCRETE CHANNEL TYPICAL SECTION**

NOT TO SCALE

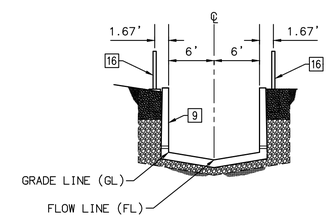


STA 27+50.00 TO STA 28+05.73

**CONCRETE CHANNEL TYPICAL SECTION**

NOT TO SCALE

SCALE 1"=10'

10 5 0 10 20 30

SCALE: 1"=10'

COUNTY OF ORANGE CALIFORNIA

| MARK | DESCRIPTION | DATE | APPR. |
|---|---|---|---|

PREPARED UNDER THE RESPONSIBLE CHARGE OF:

REGISTERED PROFESSIONAL ENGINEER DAVID EAMES No. 55501 CIVIL STATE OF CALIFORNIA

02/28/22 DATE

DAVID EAMES, P.E.

DESIGNED BY: FT
DRAWN BY: RR
CHECKED BY: DE
DRAWING NUMBER:
FILE NAME: XXXXXXXXXXXXXXXXXXX
PLOT DATE: 02/28/2022
SCALE: AS SHOWN

County of Orange OC Public Works

PREPARED BY: Michael Baker INTERNATIONAL
5 Hutton Centre Drive, Suite 500, Santa Ana, CA 92707
Phone: (949) 472-3505 - MBAKERINTL.COM

LAGUNA CANYON CHANNEL REPLACEMENT
**OCFCD FACILITY NO. 102**

PROPOSED CHANNEL PLAN/PROFILE
STA:27+50.00 TO 29+00.00

SHEET 13

SHEET 13 OF 41



EXHIBIT B

\\RIVCAIFS1\HROOT\PDATA\180154\CADD\LAND\DLV\GRADING\PRECISE\180154-013-PG.DWG RODRIGUEZ, RAUL 3/17/2022 9:38 AM

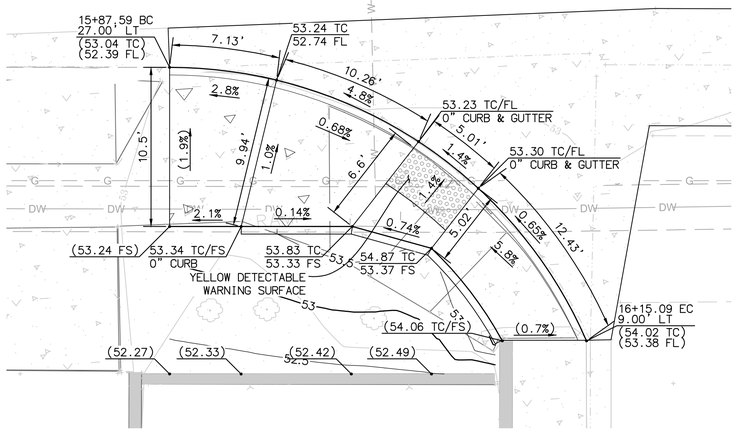


2 **ADA RAMP #1**

SCALE: 1"=5'
SEE SHEET 7

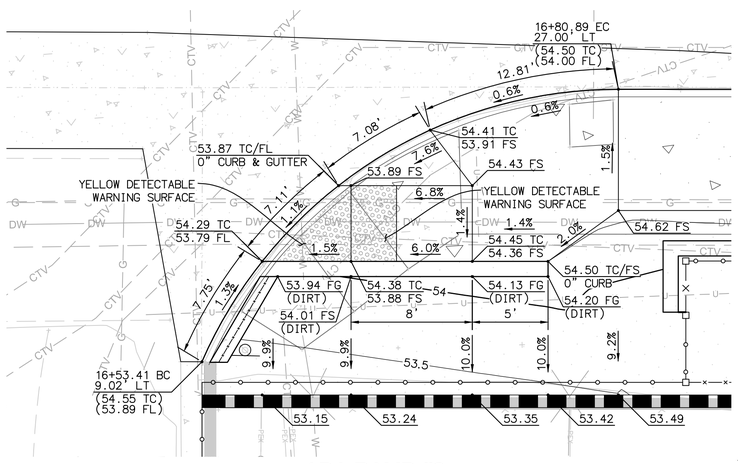


2 **ADA RAMP #2**

SCALE: 1"=5'
SEE SHEET 7

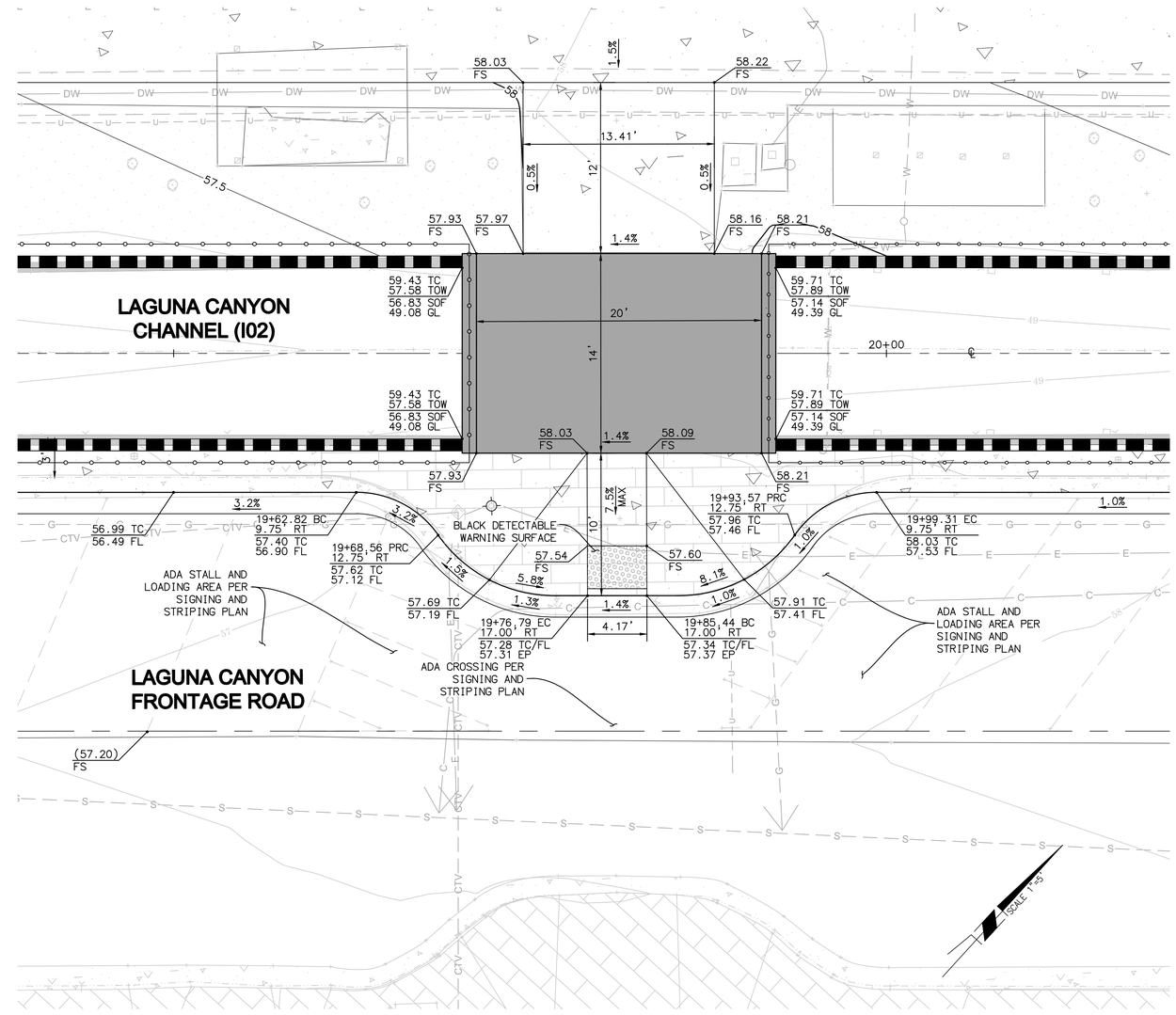


11 **ADA RAMP #3**

SCALE: 1"=5'
SEE SHEET 8

SCALE: 1"=#'

| MARK | DESCRIPTION | DATE | APPR. |
|---|---|---|---|
| | | | |

PREPARED UNDER THE RESPONSIBLE CHARGE OF:
DAVID EAMES, P.E.
02/28/22
DATE

DESIGNED BY: FT
DRAWN BY: RR
CHECKED BY: DE
DRAWING NUMBER:
FILE NAME: XXXXXXXXXXXXXXXXXX
PLOT DATE: 02/28/2022
SCALE: AS SHOWN

County of Orange
OC Public Works

PREPARED BY:
Michael Baker INTERNATIONAL
5 Hutton Centre Drive, Suite 500, Santa Ana, CA 92707
Phone: (949) 472-3505 MBAKERINTL.COM

LAGUNA CANYON CHANNEL REPLACEMENT
**OCFCD FACILITY NO. I02**

ADA COMPLIANT RAMP DETAILS

SHEET
14
SHEET 14 OF 41



EXHIBIT B

\\RVICAIFS1\HROOT\PDATA\180154\CADD\LAND\DLV\GRADING\PRECISE\180154-014-DT.DWG RODRIGUEZ, RAUL 3/17/2022 9:39 AM

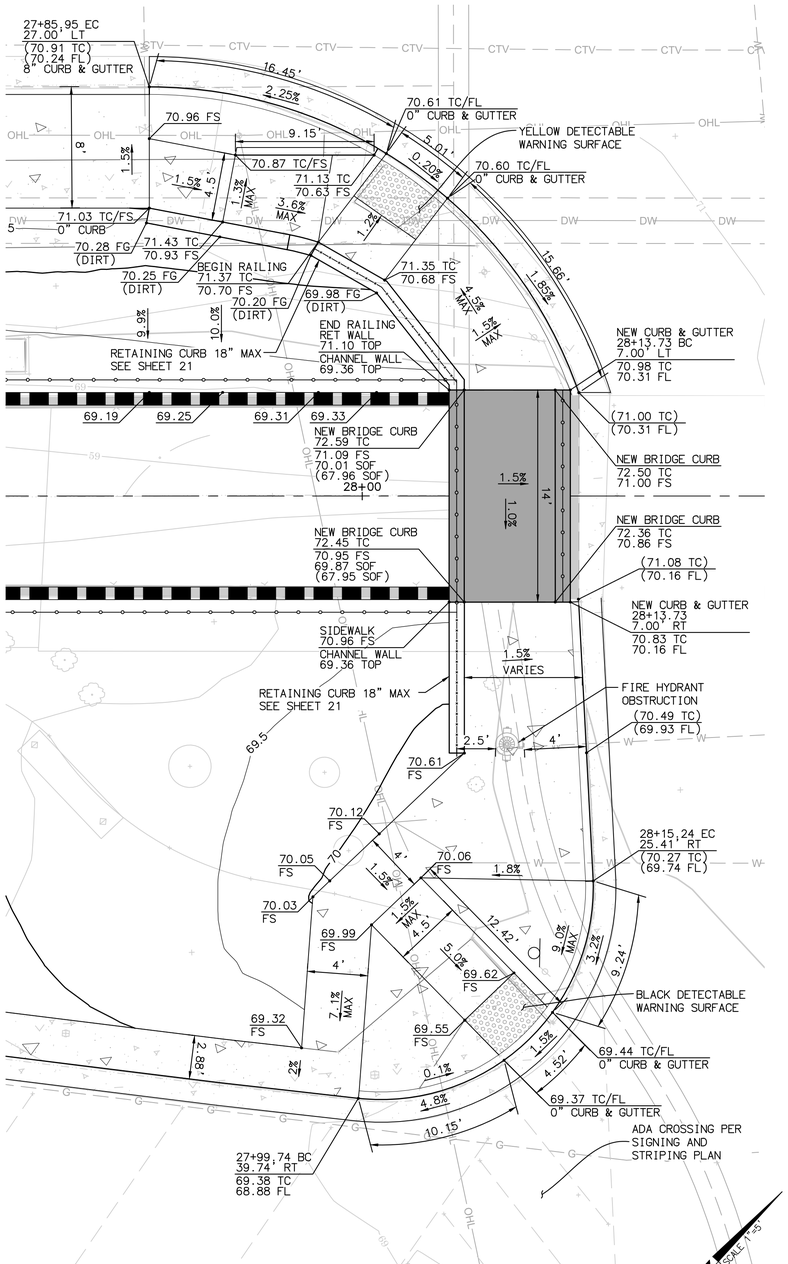


2 **ADA RAMP #4**

SCALE: 1"=5'

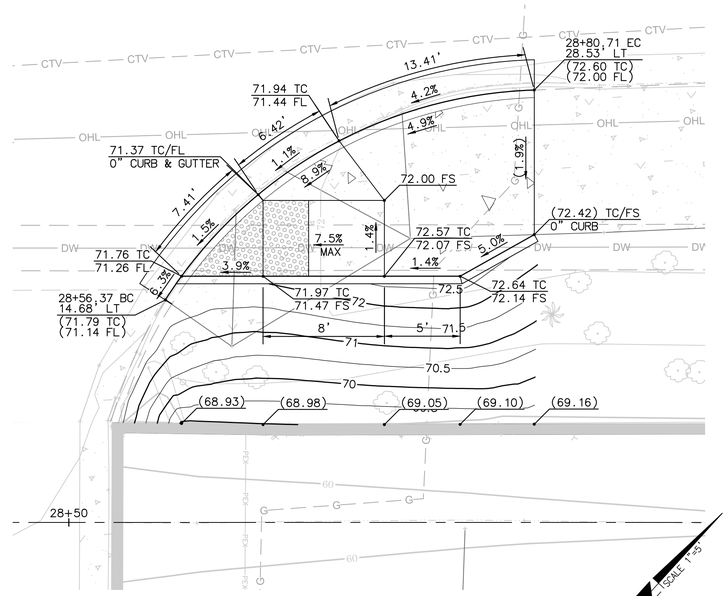


2 **ADA RAMP #6**

SCALE: 1"=5'
SEE SHEET 13

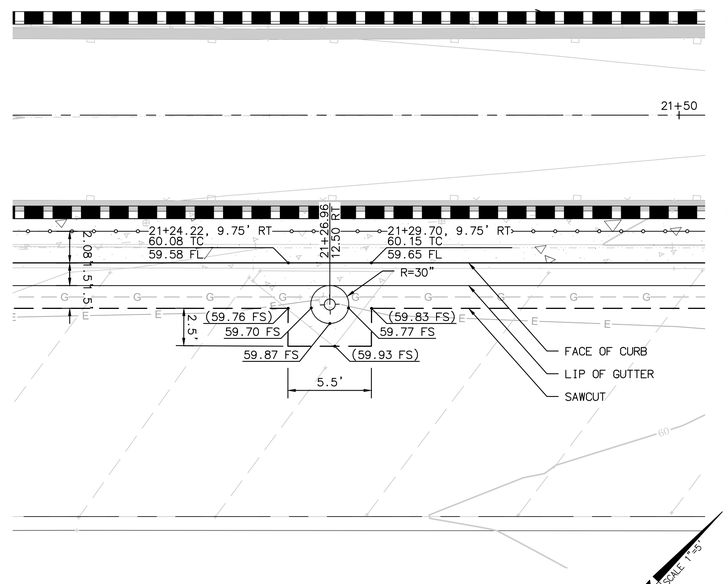


**LIGHT POST #1**

SCALE: 1"=5'
SEE SHEET 9

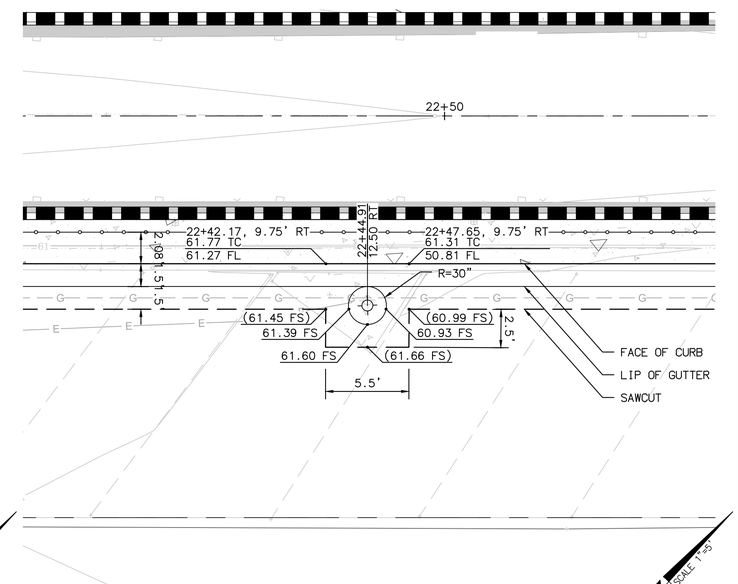


**LIGHT POST #2**

SCALE: 1"=5'
SEE SHEET 10

11 **ADA RAMP #5**

SCALE: 1"=5'
SEE SHEET 13

5 2.5 0 5 10 15

SCALE: 1"=5'

COUNTY OF ORANGE CALIFORNIA

| MARK | DESCRIPTION | DATE | APPR. |
|---|---|---|---|
| | | | |

PREPARED UNDER THE RESPONSIBLE CHARGE OF:

REGISTERED PROFESSIONAL ENGINEER DAVID EAMES No. 55501 CIVIL STATE OF CALIFORNIA

02/28/22
DATE

DAVID EAMES, P.E.

DESIGNED BY: FT
CHECKED BY: DE
DRAWN BY: RR
DRAWING NUMBER:
FILE NAME: XXXXXXXXXXXXXXXXXX
PLOT DATE: 02/28/2022
SCALE: AS SHOWN

County of Orange
OC Public Works

PREPARED BY:
Michael Baker INTERNATIONAL
5 Hutton Centre Drive, Suite 500, Santa Ana, CA 92707
Phone: (949) 472-3505 - MBAKERINTL.COM

LAGUNA CANYON CHANNEL REPLACEMENT
**OCFCD FACILITY NO. I02**

ADA COMPLIANT RAMP & LIGHT POST DETAILS

SHEET
15
SHEET 15 OF 41

\\RVICA1FS1\HROOT\PDATA\180154\CADD\LAND\DLV\GRADING\PRECISE\180154-015-DT.DWG RODRIGUEZ, RAUL 3/17/2022 9:39 AM

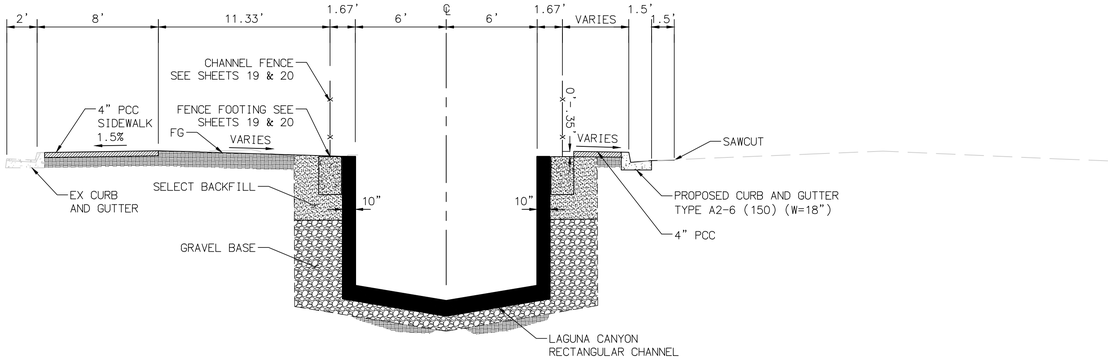


**STA 19+67.24 TO 19+70.24**
**STA 19+92.24 TO 20+09.24**
SCALE: 1"=5'

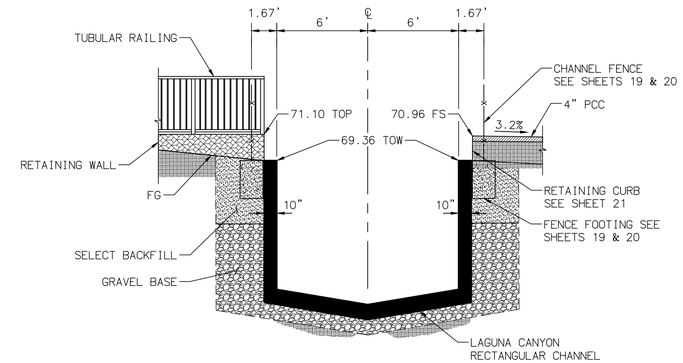


**STA 28+05.73**
SCALE: 1"=5'

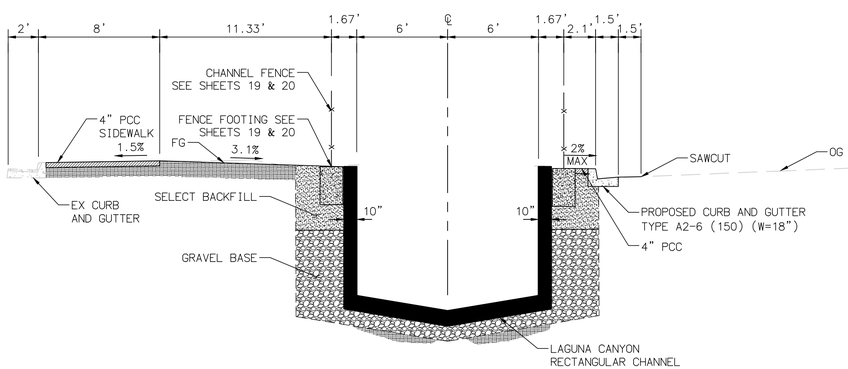


**STA 19+50**
SCALE: 1"=5'

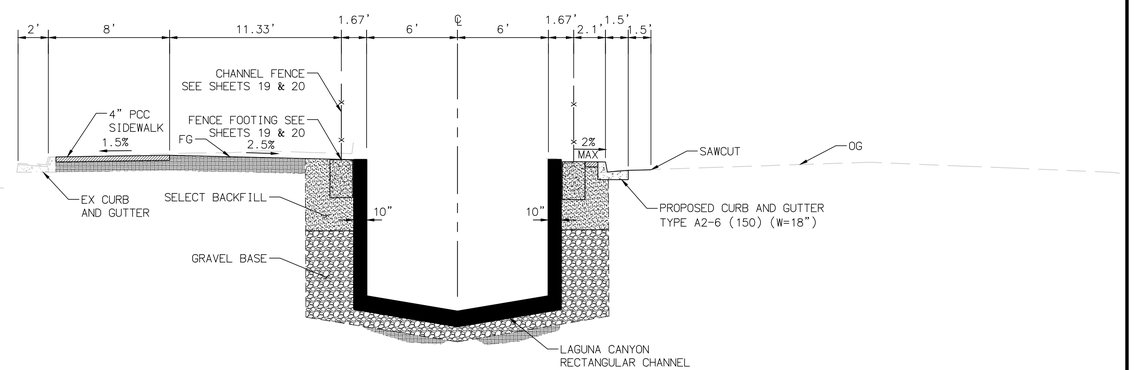


**STA 25+00**
SCALE: 1"=5'

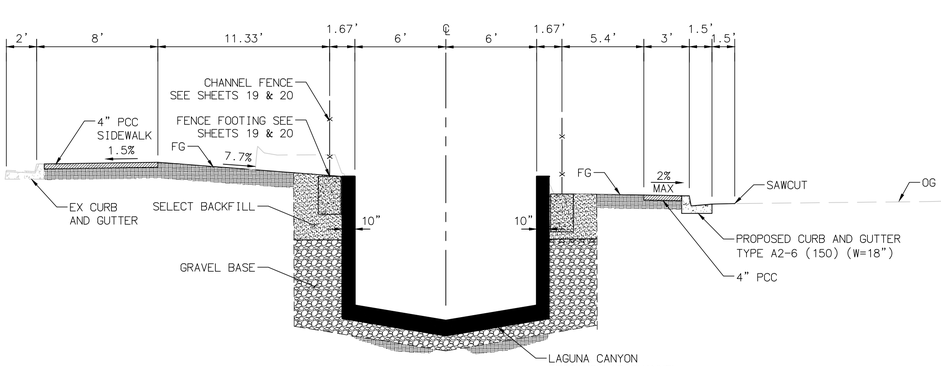


**STA 17+50**
SCALE: 1"=5'

| MARK | DESCRIPTION | DATE | APPR. |
|---|---|---|---|
| | | | |

PREPARED UNDER THE RESPONSIBLE CHARGE OF:
REGISTERED PROFESSIONAL ENGINEER DAVID EAMES No. 55501 CIVIL STATE OF CALIFORNIA
02/28/22
DATE
DAVID EAMES, P.E.

DESIGNED BY: FT
DRAWN BY: RR
CHECKED BY: DE
DRAWING NUMBER:
FILE NAME: XXXXXXXXXXXXXXXXXX
PLOT DATE: 02/28/2022
SCALE: AS SHOWN

County of Orange
OC Public Works

PREPARED BY:
Michael Baker INTERNATIONAL
5 Hutton Centre Drive, Suite 500, Santa Ana, CA 92707
Phone: (949) 472-3505 - MBAKERINTL.COM

LAGUNA CANYON CHANNEL
REPLACEMENT
**OCFCD FACILITY NO. I02**

CROSS-SECTION DETAILS

SHEET
16
SHEET 16 OF 41



EXHIBIT B

\\IRVICA1FS1\HROOT\PDATA\180154\CADD\LAND\DLV\GRADING\PRECISE\180154-016-DT.DWG RODRIGUEZ, RAUL 3/17/2022 9:40 AM

## STRUCTURAL NOTES FOR RECTANGULAR CHANNEL

1. ALL WORK MUST BE IN CONFORMANCE WITH THE STANDARD SPECIFICATIONS FOR PUBLIC WORKS CONSTRUCTION (SSPWC 2012 EDITION) AND PROJECT SPECIAL PROVISIONS.
2. UNLESS OTHERWISE SHOWN, CLEARANCE FROM FACE OF CONCRETE TO REINFORCING BARS SHALL BE:
   - CONCRETE PLACED AGAINST EARTH: 3"
   - TOP LAYER OF REINFORCING FOR INVERT SLAB: 2.5"
   - ALL OTHER CONCRETE: 2"
3. CONCRETE DIMENSIONS SHALL BE MEASURED HORIZONTALLY OR VERTICALLY ON THE PROFILE, AND PARALLEL TO OR AT RIGHT ANGLES (OR RADIALLY) TO CENTERLINE OF CONDUIT ON THE PLAN EXCEPT AS OTHERWISE SHOWN.
4. NO SPLICES IN TRANSVERSE STEEL REINFORCEMENT WILL BE PERMITTED OTHER THAN THOSE SHOWN ON THE DRAWING WITHOUT APPROVAL OF ENGINEER. NO MORE THAN TWO SPLICES WILL BE PERMITTED IN ANY LONGITUDINAL BAR BETWEEN TRANSVERSE JOINTS. SPLICES SHALL BE STAGGERED.
5. FOR LENGTH OF LAP SPLICES SEE SHEET 20.
6. AT THE BEGINNING AND ENDING OF EACH POUR, A COMPLETE CURTAIN OF REINFORCEMENT COMPOSED OF B1, B2, B3, B4 AND B5 BARS SHALL BE PLACED 3" FROM TRANSVERSE CONSTRUCTION JOINT.
7. HEIGHT OF WEEPHOLES ABOVE INVERT SHALL BE UNIFORM THROUGH ENTIRE REACH OF PROJECT.
8. THE DESIGN, INSTALLATION, REMOVAL AND COST OF TEMPORARY SHORING, EMPLOYED TO SUSTAIN CONSTRUCTION LOADING SHALL BE THE RESPONSIBILITY OF THE CONTRACTOR.
9. CHANNEL INVERT SURFACE SHALL BE GIVEN A STEEL TROWEL FINISH.
10. ALL WORK SHALL COMPLY WITH PROJECT SOIL REPORT PREPARED BY "GMU" (GMU PROJECT NO. 19-151-00 - DATED NOV 4, 2019).
11. FOUNDATION EXCAVATIONS SHALL BE VISUALLY OBSERVED BY THE SOIL ENGINEER FOR COMPLIANCE WITH THE REQUIREMENTS OF THE SOILS REPORT PRIOR TO PLACEMENT OF REINFORCING STEEL OR CONCRETE. A CERTIFICATION FOR COMPACTION OF BACKFILL FROM THE GEOTECHNICAL ENGINEER SHALL BE PROVIDED TO THE COUNTY INSPECTOR PRIOR TO FINAL SIGN OFF AND ACCEPTANCE.
12. SOILS BENEATH INVERT SHALL BE PREMOISTENED AND COMPACTED TO MINIMUM GEOTECHNICAL REQUIREMENTS PRIOR TO PLACING CONCRETE.
13. IF DURING CONSTRUCTION WET SOILS ARE ENCOUNTERED FOR THE INVERT SUBGRADE PREPARATION DUE TO THE PRESENCE OF GROUNDWATER, CRUSHED ROCK OR GEOGRID SUCH TENSAR BX1100 (OR EQUIVALENT) MAY BE USED TO SLABILIZE THE EXCAVATION BOTTOM. WET SOILS POTENTIALLY ENCOUNTERED BELOW THE CHANNEL INVERT MAY REQUIRE SIGNIFICANT DRYING INM ORDER TO BE RE-USED AS ENGINEERED FILL.
14. FOR TRANSVERSE JOINTS AND JOINT SPACING SEE DETAILS HEREON.

## RECTANGULAR CHANNEL DESIGN CRITERIA

DESIGN METHODOLOGY

ORANGE COUNTY FLOOD CONTROL DESIGN MANUAL (2000)
LOAD AND RESISTANCE FACTOR DESIGN
LOAD FACTORS: 1.5D & 1.8L
RESISTANCE REDUCTION FACTOR (PHI): 0.75

DESIGN LOADS

HS20-44 / HL 93 TRUCK LATERAL SOIL SURCHARGE
EFP = 85 pcf ACTIVE, LEVEL BACKFILL (FLOODED)
EFP = 45 pcf ACTIVE, LEVEL BACKFILL (DRAINED)
INTERNAL EFP = 40 pcf

MATERIAL PROPERTIES

CONCRETE SHALL BE CLASS 800-CSE-5000
f'c = 5,000 PSI @ 28 DAYS
TYPE V CEMENT - W/C = 0.4 (MAX)
REINFORCING TO CONFORM TO ASTM A615
fs = 60,000 PSI
REINFORCING SHALL BE HOT-DIP GALVANIZED

| SECTION DATA | | | | | | RECTANGULAR CHANNEL REINFORCING SCHEDULE | | | | | | | | | | | |
|---|---|---|---|---|---|---|---|---|---|---|---|---|---|---|---|---|---|
| STATION LIMITS | | SIZE | THICKNESS (INCHES) | | | B1 | | B2 | | | B3 | | B4 | | B5 | |
| FROM | TO | H (FT) | T1 | T2 | T3 | BAR NO. & SPACING | VERT. LENGTH | BAR NO. & SPACING | HORIZ. LENGTH | VERT. LENGTH | BAR NO. & SPACING | VERT. LENGTH | BAR NO. & SPACING | HORIZ. LENGTH | BAR NO. & SPACING | HORIZ. LENGTH |
| 16+53.42 | 19+70.24 | 8'-6" | 14" | 14" | 10" | #5 @ 12" | CONT | #6 @ 6" | 4'-1" | 5'-7" | #6 @ 12" | CONT | #6 @ 12" | CONT | #8 @ 12" | 7'-6" |
| 19+92.24 | 23+90.00 | 8'-6" | | | | | | | | | | | | | | |
| 23+90.00 | 24+00.00 | 8'-6" (MIN) TO 9'-0" (MAX) | | | | | | | | | | | | | | |
| 24+00.00 | 26+06.50 | 9'-0" | | | | | | | | | | | | | | |
| 26+06.50 | 26+16.50 | 9'-0" (MIN) TO 9'-6" (MAX) | | | | | | | | | | | | | | |
| 26+16.50 | 28+05.73 | 9'-6" | | | | | | | | | | | | | | |

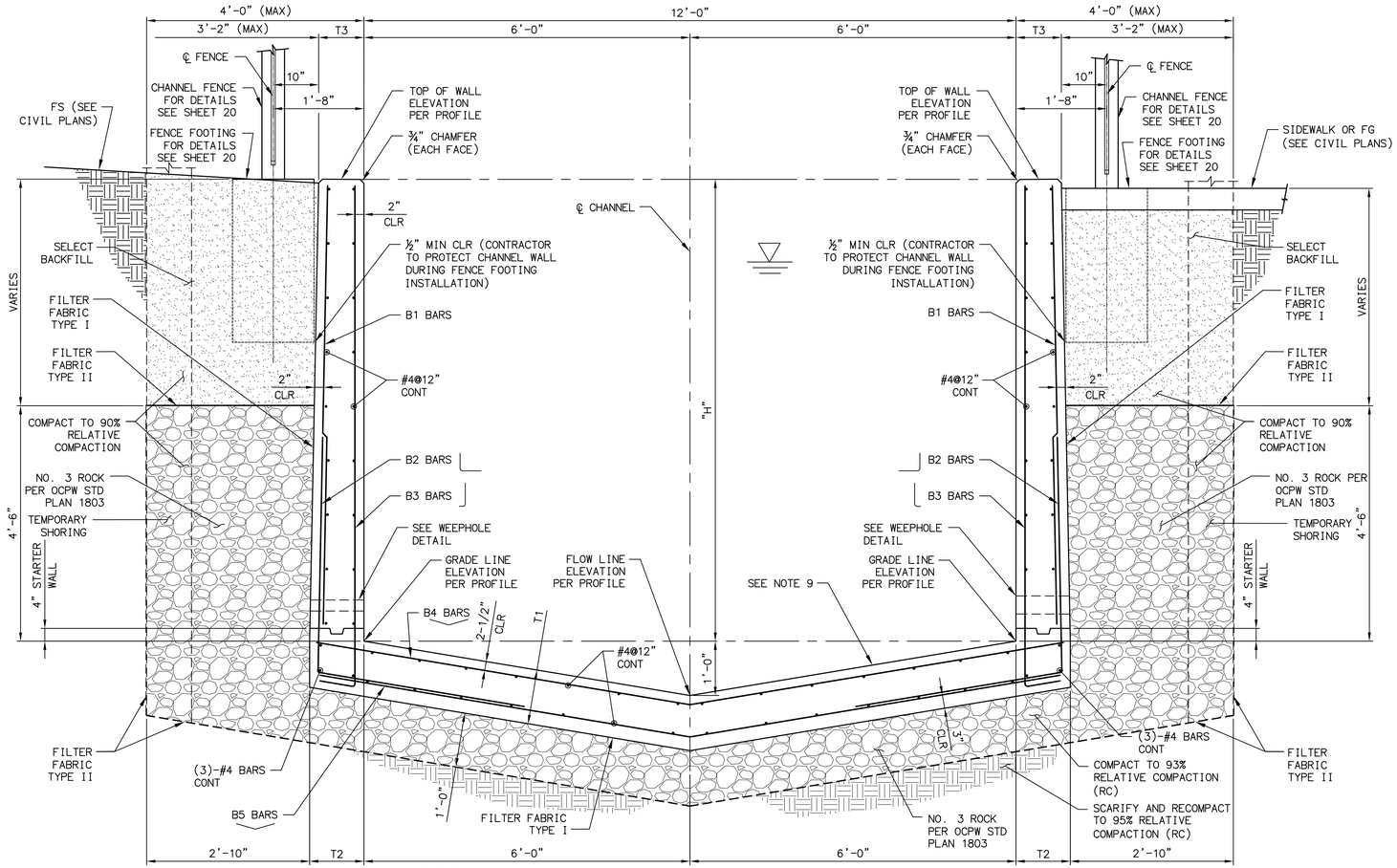


## RECTANGULAR CHANNEL - TYPICAL SECTION

(LOOKING UPSTREAM)
NO SCALE

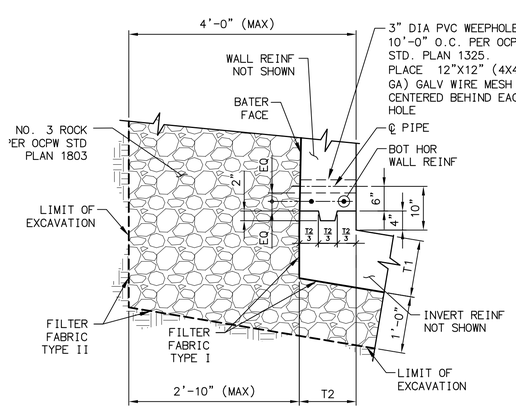


## WEEPHOLE DETAIL

NO SCALE

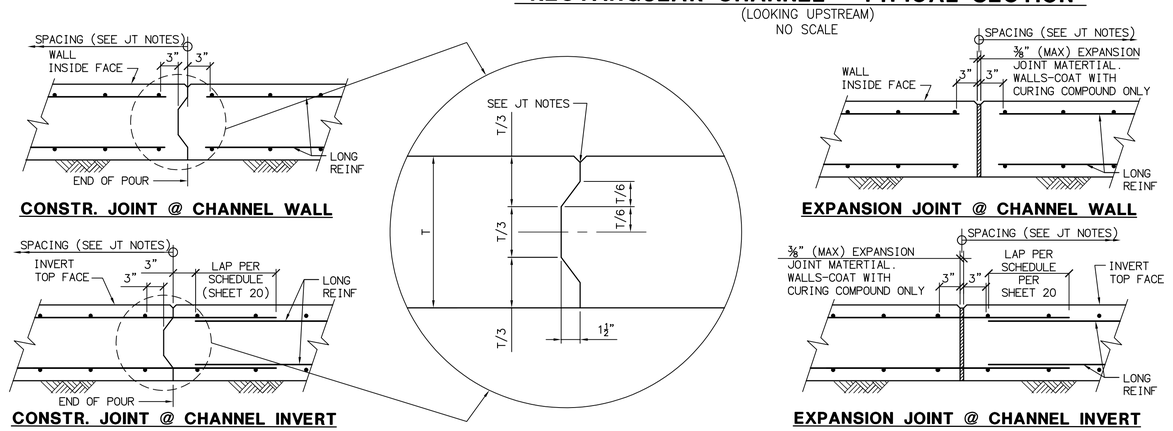


## TRANSVERSE JOINT DETAILS FOR RECTANGULAR CHANNEL

NO SCALE

### TRANSVERSE JOINTS NOTES:

1. EXPANSION JOINTS SHALL BE USED FOR RECTANGULAR CHANNEL AT INTERVALS NOT LESS THAN 10' OR MORE THAN 50' UNLESS OTHERWISE NOTED.
2. EXPANSION JOINT MATERIAL SHALL MEET THE REQUIREMENT OF SECTION 201-3.2 "PREMOLDED JOINT FILLER", OF THE GREENBOOK AND SHALL BE APPROVED BY ENGINEER.
3. CONSTRUCTION JOINTS SHALL BE USED FOR RECTANGULAR CHANNEL AT INTERVALS NOT LESS THAN 10' OR MORE THAN 50' UNLESS OTHERWISE NOTED.
4. LONGITUDINAL REINFORCING BARS SHALL BE CONTINUOUS IN INVERTS AND NON-CONTINUOUS IN WALLS FOR ALL TRANSVERSE JOINTS.
5. JOINT FINISH FOR CHANNEL FACE SHALL BE CHAMFERED 1/2 INCHES ON WALLS AND ROUNDED WITH EDGER TOOL ON INVERT.
6. TRANSVERSE CONSTRUCTION JOINTS SHALL NOT BE PLACED WITHIN 30 INCHES OF INLETS. TRANSVERSE CONSTRUCTION JOINT KEYWAYS (IN BOTH SLABS AND WALLS) SHALL BE PLACED AT THE END OF EACH POUR, BUT THE SPACING SHALL NOT EXCEED 50 FEET NOR BE LESS THAN 10 FEET, MEASURED ALONG THE CENTERLINE OF CONSTRUCTION.
7. TRANSVERSE CONSTRUCTION JOINTS IN WALLS AND SLABS SHALL BE IN THE SAME PLANE. NO STAGGERING OF JOINTS WILL BE PERMITTED. TRANSVERSE CONSTRUCTION JOINTS SHALL BE NORMAL OR RADIAL TO THE CENTERLINE OF CONSTRUCTION.
8. EXPOSED EDGES OF CONCRETE SHALL BE ROUNDED OR BEVELED UNLESS NOTED OTHERWISE.

COUNTY OF ORANGE CALIFORNIA

| MARK | DESCRIPTION | DATE | APPR. |
|---|---|---|---|
| | | | |

PREPARED UNDER THE RESPONSIBLE CHARGE OF: CIPRIAN STELEA, P.E. DATE 02/28/22

REGISTERED PROFESSIONAL ENGINEER CIPRIAN STELEA No. 73379 Exp. 12/31/2022 CIVIL STATE OF CALIFORNIA

DESIGNED BY: CS
DRAWN BY: CS
CHECKED BY: BRM
DRAWING NUMBER:
FILE NAME: XXXXXXXXXXXXXXXXXXXX
PLOT DATE: 02/28/2022
SCALE: AS SHOWN

County of Orange OC Public Works

PREPARED BY: Michael Baker INTERNATIONAL
5 Hutton Centre Drive, Suite 500, Santa Ana, CA 92707
Phone: (949) 472-3505 - MBAKERINTL.COM

LAGUNA CANYON CHANNEL REPLACEMENT
**OCFCD FACILITY NO. I02**

RECTANGULAR CHANNEL TYPICAL SECTION

SHEET 17 OF 41

REPLACEMENT OF LAGUNA CANYON CHANNEL OCFCD FACILITY No. I02

H:\PDATA\180154\CADD\STRUC\DLV\0154-S-001.DWG CSTELEA 2/21/22 9:20 am



EXHIBIT B

## STRUCTURAL NOTES FOR REINFORCED CONCRETE BOX (RCB)

1. ALL WORK MUST BE IN CONFORMANCE WITH THE STANDARD SPECIFICATIONS FOR PUBLIC WORKS CONSTRUCTION (SSPWC 2012 EDITION) AND PROJECT SPECIAL PROVISIONS.
2. UNLESS OTHERWISE SHOWN, CLEARANCE FROM FACE OF CONCRETE TO REINFORCING BARS SHALL BE:
   - CONCRETE PLACED AGAINST EARTH: 3"
   - TOP LAYER OF REINFORCING FOR INVERT SLAB: 2.5"
   - ALL OTHER CONCRETE: 2"
3. CONCRETE DIMENSIONS SHALL BE MEASURED HORIZONTALLY OR VERTICALLY ON THE PROFILE, AND PARALLEL TO OR AT RIGHT ANGLES (OR RADIALLY) TO CENTERLINE OF CONDUIT ON THE PLAN EXCEPT AS OTHERWISE SHOWN.
4. NO SPLICES IN TRANSVERSE STEEL REINFORCEMENT WILL BE PERMITTED OTHER THAN THOSE SHOWN ON THE DRAWING WITHOUT APPROVAL OF ENGINEER. NO MORE THAN TWO SPLICES WILL BE PERMITTED IN ANY LONGITUDINAL BAR BETWEEN TRANSVERSE JOINTS. SPLICES SHALL BE STAGGERED.
5. FOR LENGTH OF LAP SPLICES SEE SHEET 20.
6. AT THE BEGINNING AND ENDING OF EACH POUR, A COMPLETE CURTAIN OF REINFORCEMENT COMPOSED OF B1 THROUGH B8 BARS SHALL BE PLACED 3" FROM TRANSVERSE CONSTRUCTION JOINT.
7. HEIGHT OF WEEPHOLES ABOVE INVERT SHALL BE UNIFORM THROUGH ENTIRE REACH OF PROJECT.
8. THE DESIGN, INSTALLATION, REMOVAL AND COST OF TEMPORARY SHORING, EMPLOYED TO SUSTAIN CONSTRUCTION LOADING SHALL BE THE RESPONSIBILITY OF THE CONTRACTOR.
9. RCB INVERT SURFACE SHALL BE GIVEN A STEEL TROWEL FINISH.
10. ALL WORK SHALL COMPLY WITH PROJECT SOIL REPORT PREPARED BY "GMU" (GMU PROJECT NO. 19-151-00 - DATED NOV 4, 2019).
11. FOUNDATION EXCAVATIONS SHALL BE VISUALLY OBSERVED BY THE SOIL ENGINEER FOR COMPLIANCE WITH THE REQUIREMENTS OF THE SOILS REPORT PRIOR TO PLACEMENT OF REINFORCING STEEL OR CONCRETE. A CERTIFICATION FOR COMPACTION OF BACKFILL FROM THE GEOTECHNICAL ENGINEER SHALL BE PROVIDED TO THE COUNTY INSPECTOR PRIOR TO FINAL SIGN OFF AND ACCEPTANCE.
12. SOILS BENEATH INVERT SHALL BE PREMOISTENED AND COMPACTED TO MINIMUM GEOTECHNICAL REQUIREMENTS PRIOR TO PLACING CONCRETE.
13. IF DURING CONSTRUCTION WET SOILS ARE ENCOUNTERED FOR THE INVERT SUBGRADE PREPARATION DUE TO THE PRESENCE OF GROUNDWATER, CRUSHED ROCK OR GEOGRID SUCH TENSAR BX1100 (OR EQUIVALENT) MAY BE USED TO SLABILIZE THE EXCAVATION BOTTOM. WET SOILS POTENTIALLY ENCOUNTERED BELOW THE CHANNEL INVERT MAY REQUIRE SIGNIFICANT DRYING INM ORDER TO BE RE-USED AS ENGINEERED FILL.
14. NO TRANSVERSE JOINTS ARE ALLOWED FOR RCB CONSTRUCTION.

## RCB DESIGN CRITERIA

DESIGN METHODOLOGY

ORANGE COUNTY FLOOD CONTROL (OCFCD) DESIGN MANUAL (2000 EDITION)
AASHTO LRFD BRIDGE DESIGN SPECIFICATIONS - 8TH EDITION (W/ CA AMENDMENTS)
CALTRANS MEMO TO DESIGNERS - MTD 23-1 (JUNE 2017)
GEOTECHNICAL REPORT - LAGUNA CANYON CHANNEL EMERGENCY REPAIR, CITY OF LAGUNA BEACH, CALIFORNIA, DATED NOVEMBER 14, 2019, PROJECT NO. 19-151-00
LOAD AND RESISTANCE FACTOR DESIGN
LOAD FACTORS: 1.5D & 1.8L
RESISTANCE REDUCTION FACTOR (PHI): 0.75

DESIGN LOADS

HS20-44 / HL 93 TRUCK LIVE LOAD (INCLUDING IMPACT)
HS20-44 / HL 93 TRUCK LATERAL SOIL SURCHARGE
EFP = 85 pcf ACTIVE, LEVEL BACKFILL (FLOODED)
EFP = 45 pcf ACTIVE, LEVEL BACKFILL (DRAINED)
INTERNAL EFP = 40 pcf

MATERIAL PROPOERTIES

CONCRETE SHALL BE CLASS 800-CSE-5000
f'c = 5,000 PSI @ 28 DAYS
TYPE V CEMENT - W/C = 0.4 (MAX)
REINFORCING TO CONFORM TO ASTM A615
fs = 60,000 PSI
REINFORCING SHALL BE HOT-DIP GALVANIZED

| SECTION DATA | | | | | | RCB REINFORCING SCHEDULE | | | | | | | | | | | | | | | | | |
|---|---|---|---|---|---|---|---|---|---|---|---|---|---|---|---|---|---|---|---|---|---|---|---|
| STATION LIMITS | | SIZE | THICKNESS (INCHES) | | | B1 | | B2 | | B3 | | | B4 | | | B5 | | B6 | | B7 | | B8 | |
| FROM | TO | H (FT) | T1 | T2 | T3 | BAR NO. & SPACING | VERT. LENGTH | BAR NO. & SPACING | VERT. LENGTH | BAR NO. & SPACING | HORIZ. LENGTH | VERT. LENGTH | BAR NO. & SPACING | HORIZ. LENGTH | VERT. LENGTH | BAR NO. & SPACING | HORIZ. LENGTH | BAR NO. & SPACING | HORIZ. LENGTH | BAR NO. & SPACING | HORIZ. LENGTH | BAR NO. & SPACING | HORIZ. LENGTH |
| 19+70.22 | 19+92.22 | 7'-9" | 13" | 12" | 12" | #6 @ 12" | CONT | #6 @ 12" | CONT | #6 @ 6" | 6'-1" | 6'-7" | #6 @ 12" | 5'-7" | 6'-7" | #6 @ 6" | CONT | #6 @ 12" | CONT | #6 @ 12" | CONT | #6 @ 6" | CONT |
| 28+05.73 | 28+13.73 | 10'-0" | | | | | | | | | | | | | | | | | | | | | |

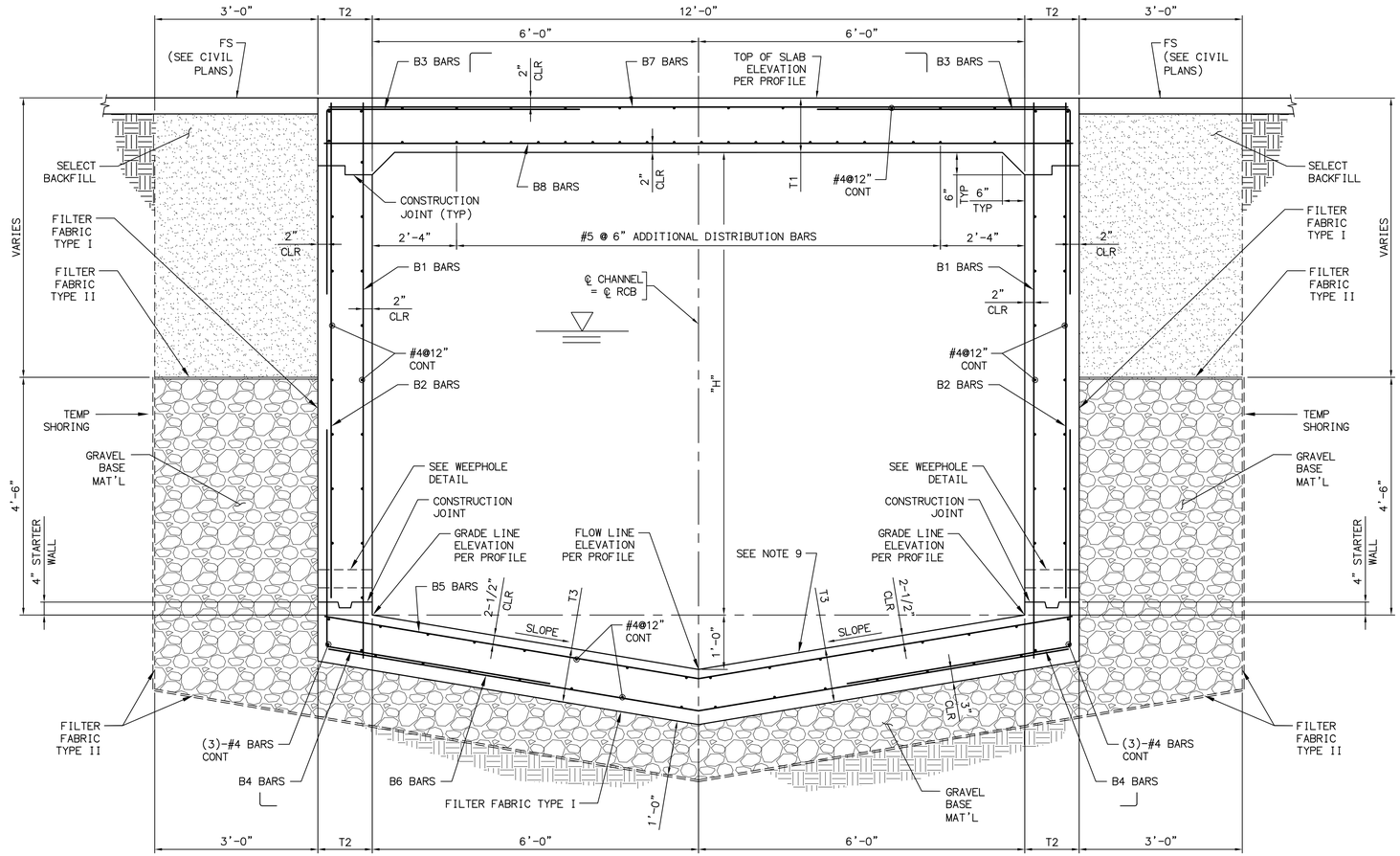


## RCB - TYPICAL SECTION

(LOOKING UPSTREAM)
NO SCALE

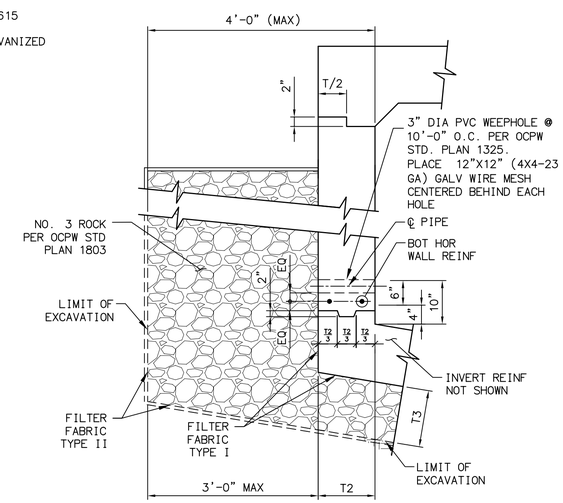


## WEEPHOLE DETAIL

NO SCALE

COUNTY OF ORANGE CALIFORNIA

| MARK | DESCRIPTION | DATE | APPR. |
|---|---|---|---|
| | | | |

PREPARED UNDER THE RESPONSIBLE CHARGE OF: REGISTERED PROFESSIONAL ENGINEER CIPRIAN STELEA No. 73379 Exp. 12/31/2022 CIVIL STATE OF CALIFORNIA — DATE 02/28/22

DESIGNED BY: CS | DRAWN BY: CS | CHECKED BY: BRM | DRAWING NUMBER: | FILE NAME: XXXXXXXXXXXXXXXXXXXX | PLOT DATE: 02/28/2022 | SCALE: AS SHOWN

PREPARED BY: Michael Baker INTERNATIONAL — 5 Hutton Centre Drive, Suite 500, Santa Ana, CA 92707 Phone: (949) 472-3505 · MBAKERINTL.COM

County of Orange OC Public Works

LAGUNA CANYON CHANNEL REPLACEMENT
**OCFCD FACILITY NO. I02**

RCB TYPICAL SECTION

SHEET 18 SHEET 18 OF 41

REPLACEMENT OF LAGUNA CANYON CHANNEL OCFCD FACILITY No. I02

H:\PDATA\180154\CADD\STRUC\DLV\0154-S-002.DWG CSTELEA 2/21/22 9:22 am



EXHIBIT B

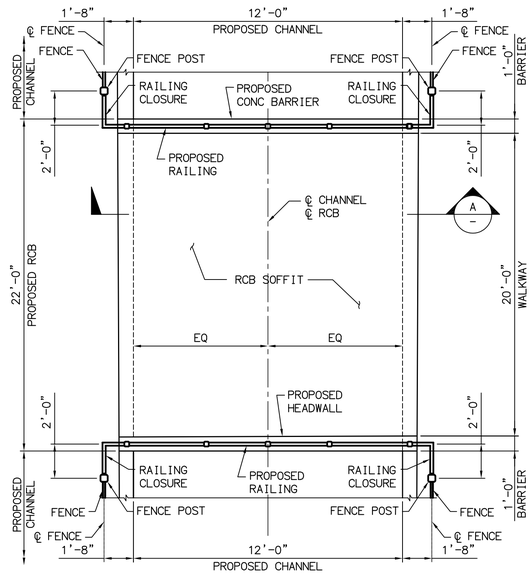


## RCB CROSSING - PLAN

(FROM STA 19+70.24 TO STA 19+92.24)
SCALE: 1/4" = 1'-0"

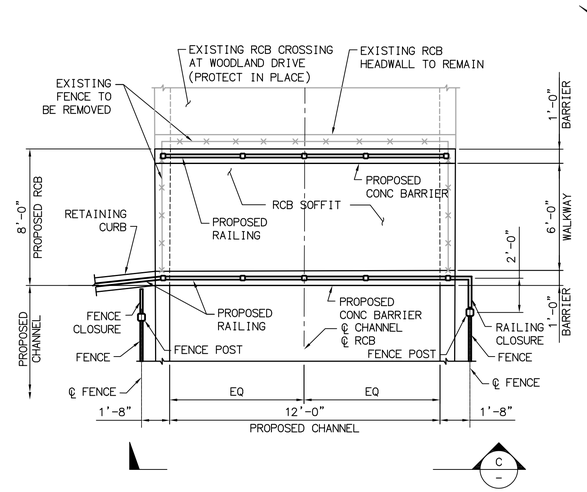


## RCB CROSSING @ WOODLAND DR. - PLAN

(FROM STA 28+05.73 TO STA 28+13.73)
SCALE: 1/4" = 1'-0"

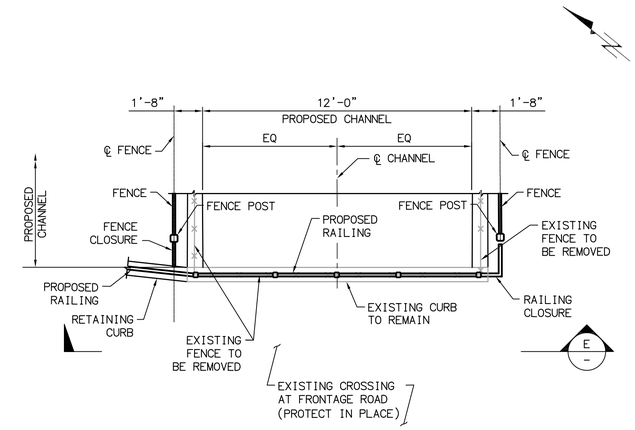


## CROSSING @ FRONTAGE RD. - PLAN

(FROM STA 28+05.73 TO STA 28+13.73)
SCALE: 1/4" = 1'-0"

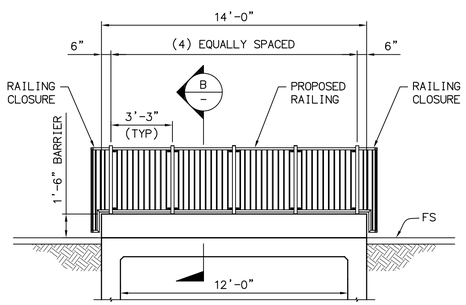


## SECTION

SCALE: 1/4" = 1'-0" (A)

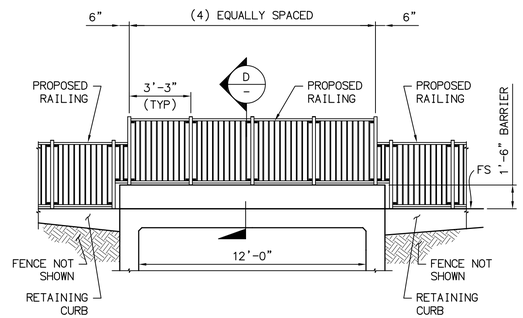


## SECTION

SCALE: 1/4" = 1'-0" (C)

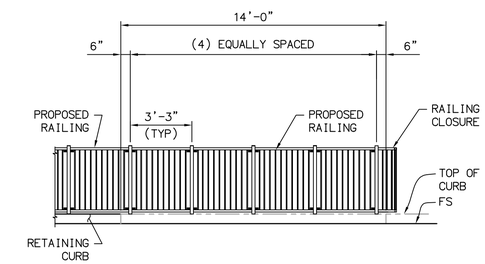


## SECTION

SCALE: 1/4" = 1'-0" (E)

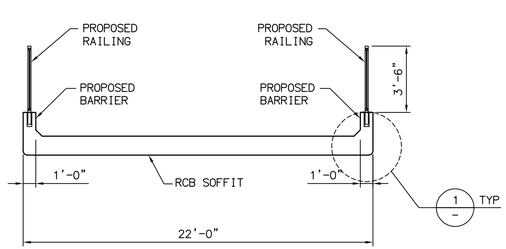


## SECTION

SCALE: 1/4" = 1'-0" (B)

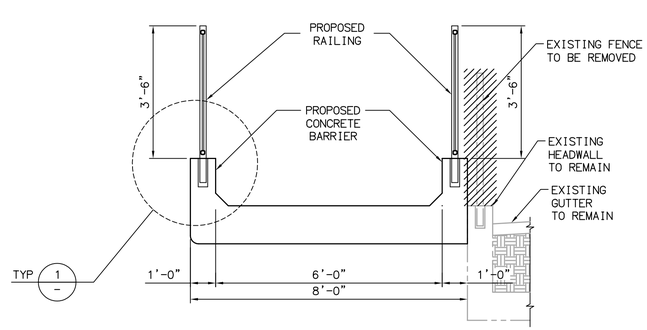


## SECTION

SCALE: 1/4" = 1'-0" (D)

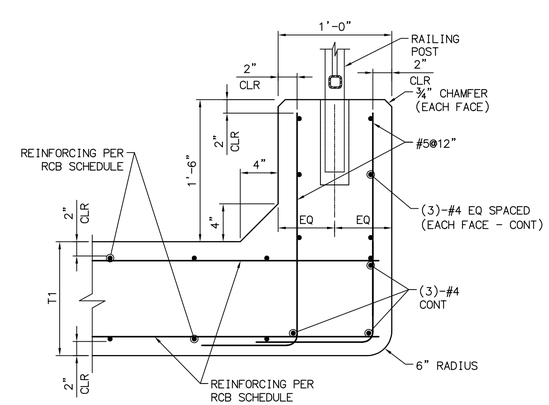


## BARRIER DETAIL

SCALE: 1-1/2" = 1'-0" (1)

| MARK | DESCRIPTION | DATE | APPR. |
|---|---|---|---|
| | | | |

PREPARED UNDER THE RESPONSIBLE CHARGE OF:
REGISTERED PROFESSIONAL ENGINEER CIPRIAN STELEA No. 73379 Exp. 12/31/2022 CIVIL STATE OF CALIFORNIA
02/28/22 DATE
CIPRIAN STELEA, P.E.

DESIGNED BY: CS
DRAWN BY: CS
CHECKED BY: BRM
DRAWING NUMBER:
FILE NAME: XXXXXXXXXXXXXXXXXXXX
PLOT DATE: 02/28/2022
SCALE: AS SHOWN

County of Orange
OC Public Works

PREPARED BY:
Michael Baker INTERNATIONAL
5 Hutton Centre Drive, Suite 500, Santa Ana, CA 92707
Phone: (949) 472-3505 / MBAKERINTL.COM

LAGUNA CANYON CHANNEL REPLACEMENT
**OCFCD FACILITY NO. 102**

BARRIER / RAILING - PLAN, SECTIONS AND DETAILS

SHEET
19
SHEET 19 OF 41

REPLACEMENT OF LAGUNA CANYON CHANNEL OCFCD FACILITY No. 102

H:\PDATA\180154\CADD\STRUC\DLV\0154-S-003.DWG STELEA, CIPRIAN 3/9/2022 10:26 PM



EXHIBIT B

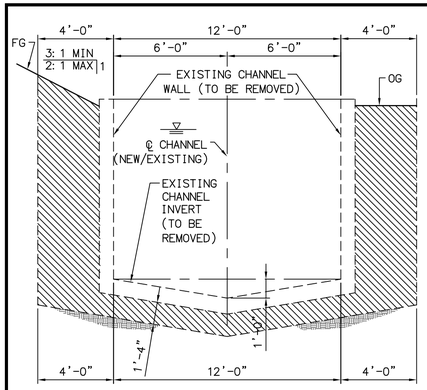


CHANNEL EXCAVATION

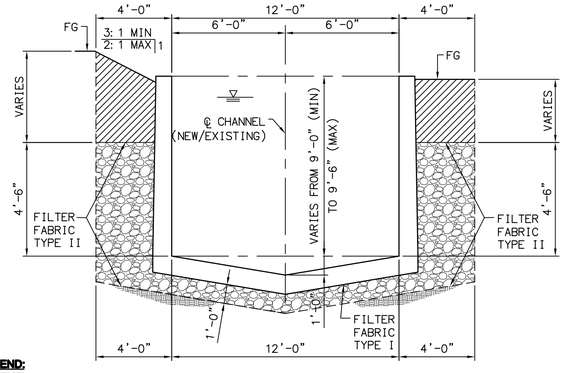


CHANNEL BACKFILL

LEGEND:
EXCAVATION
BACKFILL
GRAVEL BASE

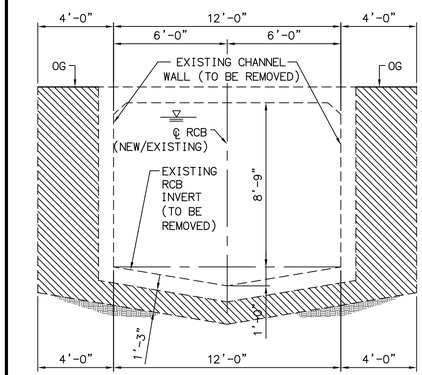


RCB EXCAVATION

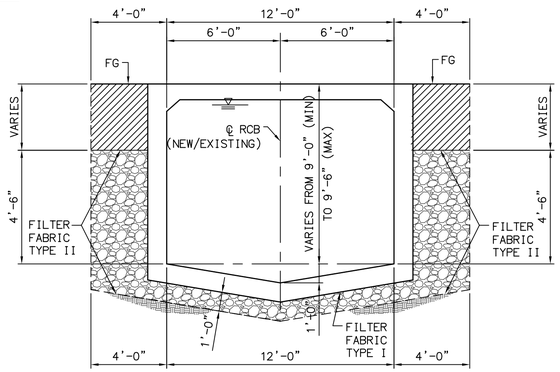


RCB BACKFILL

## CHANNEL / RCB - EXCAVATION AND BACKFILL

NO SCALE

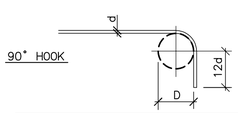


| BEND SCHEDULE | |
|---|---|
| BAR SIZES | D |
| #3 THRU #8 | 6d |
| #9 THRU #11 | 8d |
| #14 THRU #18 | 10d |

d = DIAMETER OF REINF. BAR
* = TOP BARS ARE HORIZONTAL BARS WITH MORE THAN 12" OF CONCRETE CAST BELOW THE BAR, OR AS INDICATED ON PLANS.

| LAP SCHEDULE | | |
|---|---|---|
| f'c = 5,000psi<br>Fy = 60,000psi | | |
| BAR SIZE | TOP * BARS | OTHER BARS |
| #3 | 2'-7" | 2'-0" |
| #4 | 3'-5" | 2'-8" |
| #5 | 4'-3" | 3'-3" |
| #6 | 5'-1" | 3'-11" |
| #7 | 7'-5" | 5'-9" |
| #8 | 8'-6" | 6'-6" |
| #9 | 9'-7" | 7'-4" |
| #10 | 10'-9" | 8'-5" |
| #11 | 12'-0" | 9'-2" |

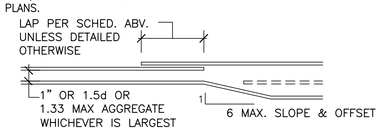


## TYPICAL REINFORCING DETAIL

NO SCALE

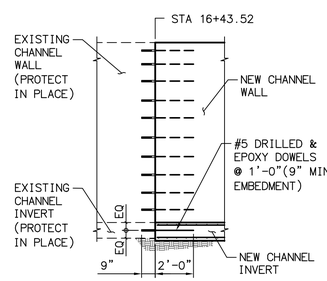


## CHANNEL JOINT @ STA 16+43.52

NO SCALE

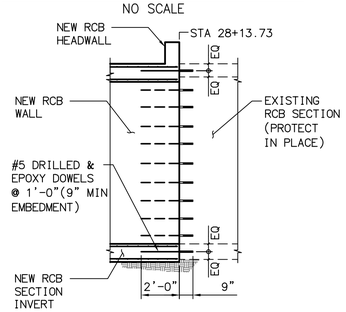


## RCB JOINT @ STA 28+13.73

NO SCALE

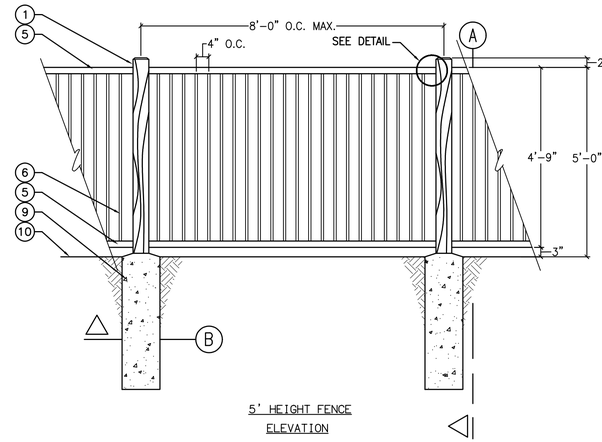


5' HEIGHT FENCE ELEVATION

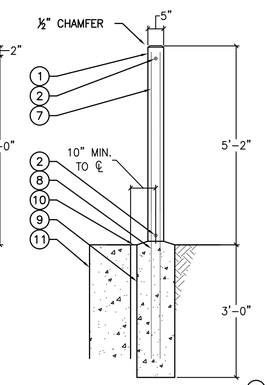


5' HEIGHT FENCE SECTION A

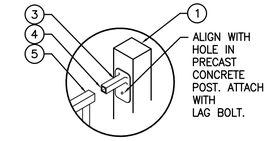


SLIDER BRACKET ATTACHMENT DETAIL

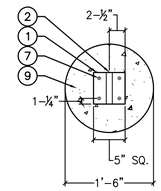


SECTION B

FENCE NOTES:

1. THE CONTRACTOR IS RESPONSIBLE TO VERIFY THAT THE DIMENSIONS OF THE EQUIPMENT NEEDED FOR THE FENCE SYSTEM ARE COMPATIBLE WITH THE PRE-CAST CONCRETE COMPONENTS PRIOR TO ORDERING. THE CONTRACTOR IS RESPONSIBLE TO MAKE ADJUSTMENTS AS NECESSARY TO INSTALL THE FENCE AS SHOWN.
2. ALL REINFORCING STEEL SHALL CONFORM TO ASTM A615 GRADE 60.
3. CONTRACTOR SHALL ENSURE THAT A SPHERE 4" IN DIAMETER CANNOT PASS THROUGH ANY PORTION OF THE CHANNEL FENCE.
4. FENCE CONSTRUCTION SHALL COMPLY WITH CURRENT CALIFORNIA BUILDING CODE REQUIREMENTS.
5. ALL MATERIAL TO BE GALVANIZED.
6. POWDER COAT WITH RAL 8028.
7. ALL PICKET CONTINUOUS WELDS AND COLD GALVANIZED APPLIED TO WELDS.
8. CONNECT PANELS TO POST WITH SLIDER BRACKETS (NO WELDING). TOP AND BOTTOM.

## CHANNEL FENCE - TYPICAL ELEVATION

NO SCALE

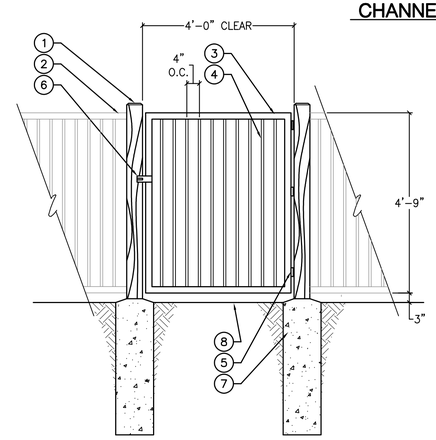


5' HEIGHT GATE ELEVATION

1. 5" SQUARE PRE-CAST CONCRETE POST BY AMERICAN PRECAST OR APPROVED EQUAL WITH NATURAL WOOD GRAIN FINISH, INTEGRALLY COLORED WITH 'ADOBE' BY DAVIS COLORS OR APPROVED EQUAL. CONCRETE SHALL ATTAIN A MINIMUM COMPRESSIVE STRENGTH OF 5000 PSI @ 28 DAYS. (4) #4 REBAR VERTICAL IN POSTS SHALL EXTEND 24" MIN. INTO CONCRETE FOOTING.
2. CHANNEL FENCE
3. 2" SQ. GATE FRAME.
4. ¾" SQ. PICKETS @ 4" O.C. (18 G.A.)
5. (3) HEAVY DUTY SELF CLOSING HINGES.
6. HEAVY DUTY LATCH WITH MASTER KEYED PADLOCK PER OCFCD REQUIREMENTS.
7. CONCRETE FOOTING
8. FINISH GRADE.

FENCE GATE NOTES:

1. CONTRACTOR IS TO SUBMIT SHOP DRAWINGS FOR GATE, HINGES, LOCKS, AND ALL HARDWARE.
2. THE CONTRACTOR IS RESPONSIBLE TO VERIFY THAT THE DIMENSIONS OF THE EQUIPMENT NEEDED FOR THE GATE SYSTEM ARE COMPATIBLE WITH THE PRE-CAST CONCRETE COMPONENTS PRIOR TO ORDERING. THE CONTRACTOR IS RESPONSIBLE TO MAKE ADJUSTMENTS AS NECESSARY TO INSTALL THE GATE AS SHOWN.
3. CONTRACTOR SHALL ENSURE THAT A SPHERE 4" IN DIAMETER CANNOT PASS THROUGH ANY PORTION OF THE CHANNEL GATE.
4. GATE CONSTRUCTION SHALL COMPLY WITH CURRENT CALIFORNIA BUILDING CODE REQUIREMENTS.
5. ALL MATERIAL TO BE GALVANIZED.
6. PAINT WITH ONE COAT EPOXY PRIMER & ONE COAT EXTERIOR ENAMEL FINISH. COLOR: BROWN.
7. ALL PICKET CONTINUOUS WELDS AND COLD GALVANIZED APPLIED TO WELDS.

## CHANNEL FENCE GATE - TYPICAL ELEVATION

NO SCALE

1. 5" SQUARE PRE-CAST CONCRETE POST BY AMERICAN PRECAST CONCRETE, INC. OR APPROVED EQUAL WITH NATURAL WOOD GRAIN FINISH, INTEGRALLY COLORED WITH 'ADOBE' BY DAVIS COLORS OR APPROVED EQUAL. CONCRETE SHALL ATTAIN A MINIMUM COMPRESSIVE STRENGTH OF 5000 PSI @ 28 DAYS.
2. HOLE IN PRE-CAST CONCRETE POST TO ACCOMMODATE LAG BOLT THROUGH FENCE AND ACCEPT THE BRACKET. TOP AND BOTTOM.
3. SLIDER BRACKET. OUTSIDE DIMENSION SLIGHTLY LESS THAN INSIDE DIMENSION OF TOP OR BOTTOM RAIL.
4. CAULK JOINT WITH CLEAR SILICON.
5. 2" TUBULAR STEEL RAILS TOP & BOTTOM (16 G.A.). SLIPS OVER SLIDER BRACKET.
6. ¾" SQ. PICKETS @ 4" O.C. (18 G.A.)
7. PRECAST POST REINFORCING TO BE EMBEDDED INTO POST FOOTING
8. 24" MIN. EMBEDMENT FOR PRECAST POST REINFORCING
9. UNREINFORCED CONCRETE FOOTING. SLOPE TOP OF FOOTING AWAY FROM POST.
10. FINISH GRADE.
11. EXISTING CONCRETE CHANNEL WALL.

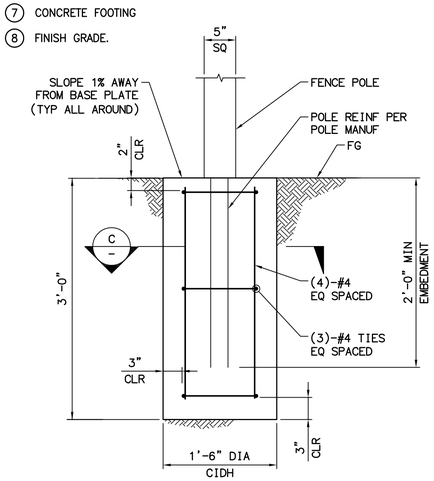


## CIDH PILE FOR FENCE POST

SCALE: 1-1/2" = 1'-0"

## CIDH PILE NOTES:

1. CONCRETE SHALL HAVE AN ULTIMATE CONCRETE STRENGHT f'c = 3,250 PSI (TYPE V CEMENT).
2. REINFORCING TO CONFORM TO ASTM A615 (GRADE 60 NON-GALVANIZED).

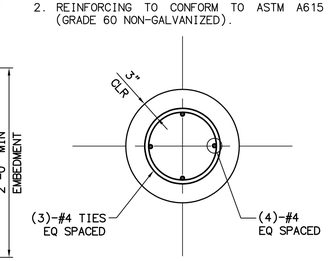


SECTION C

NOT TO SCALE

COUNTY OF ORANGE CALIFORNIA

| MARK | DESCRIPTION | DATE | APPR. |
|---|---|---|---|
| | | | |

PREPARED UNDER THE RESPONSIBLE CHARGE OF:

REGISTERED PROFESSIONAL ENGINEER CIPRIAN STELEA No. 73379 Exp. 12/31/2022 CIVIL STATE OF CALIFORNIA

CIPRIAN STELEA, P.E. — DATE 02/28/22

DESIGNED BY: CS
DRAWN BY: CS
CHECKED BY: BRM
DRAWING NUMBER:
FILE NAME: XXXXXXXXXXXXXXXXXX
PLOT DATE: 02/28/2022
SCALE: AS SHOWN

County of Orange OC Public Works

PREPARED BY: Michael Baker INTERNATIONAL
5 Hutton Centre Drive, Suite 500, Santa Ana, CA 92707
Phone: (949) 472-3505 - MBAKERINTL.COM

LAGUNA CANYON CHANNEL REPLACEMENT
**OCFCD FACILITY NO. I02**

MISCELLANEOUS DETAILS

SHEET 20 OF 41



EXHIBIT B

H:\PDATA\180154\CADD\STRUC\DLV\0154-S-004.DWG CSTELEA 2/21/22 9:28 am

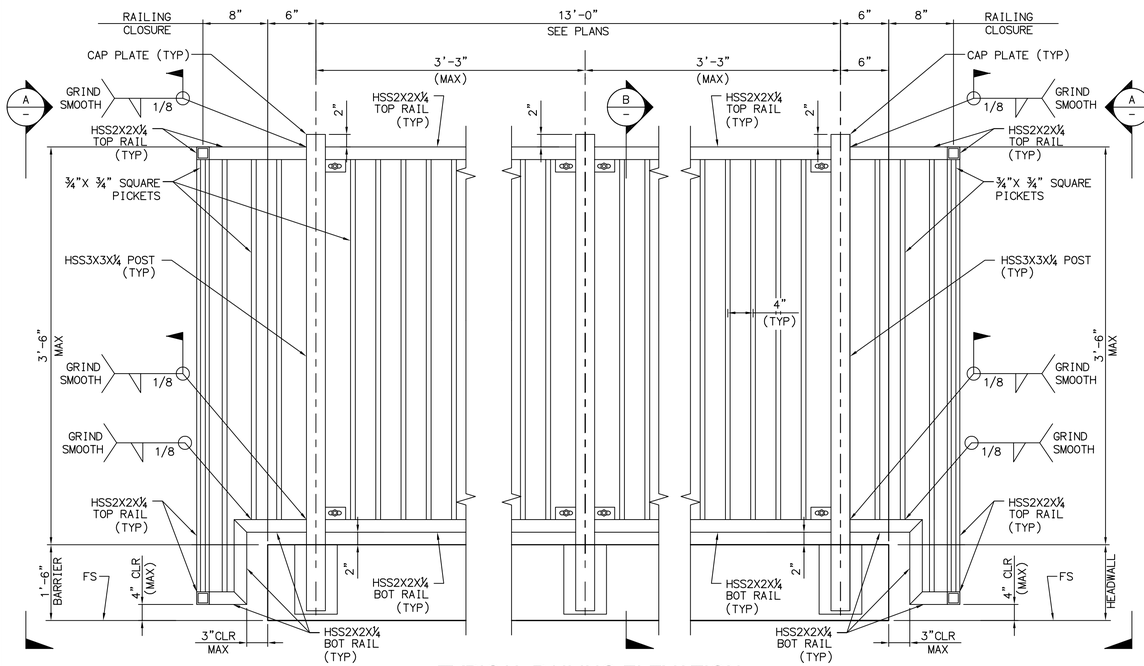


## TYPICAL RAILING ELEVATION

SCALE: 1" = 1'-0"

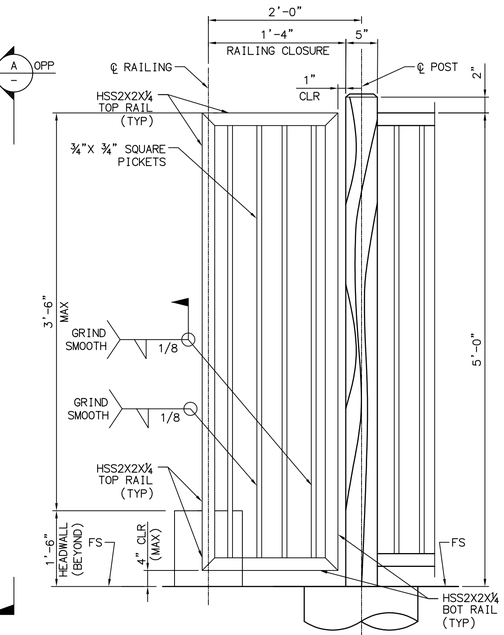


## SECTION A

SCALE: 1" = 1'-0"

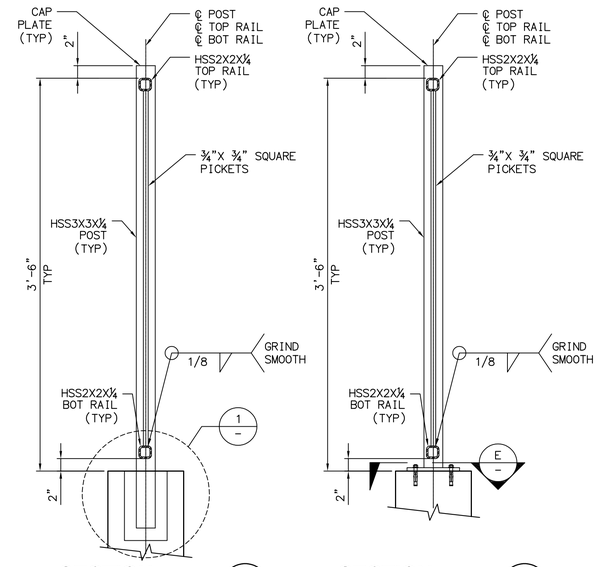


## SECTION B

SCALE: 1" = 1'-0"

## SECTION C

SCALE: 1" = 1'-0"

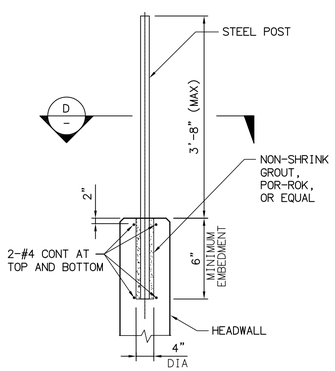


## DETAIL 1

SCALE: 1" = 1'-0"

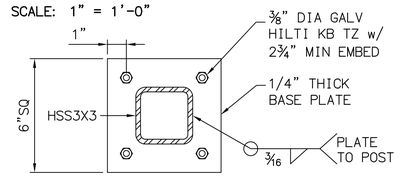


## SECTION E

SCALE: 1" = 1'-0"

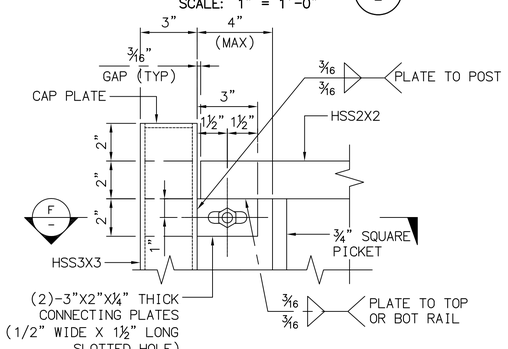


## DETAIL 2

SCALE: 3" = 1'-0"

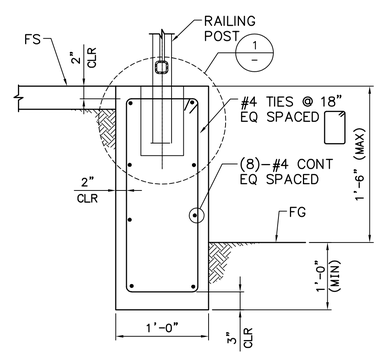


## TYPICAL RETAINING CURB SECTION

SCALE: 1" = 1'-0"

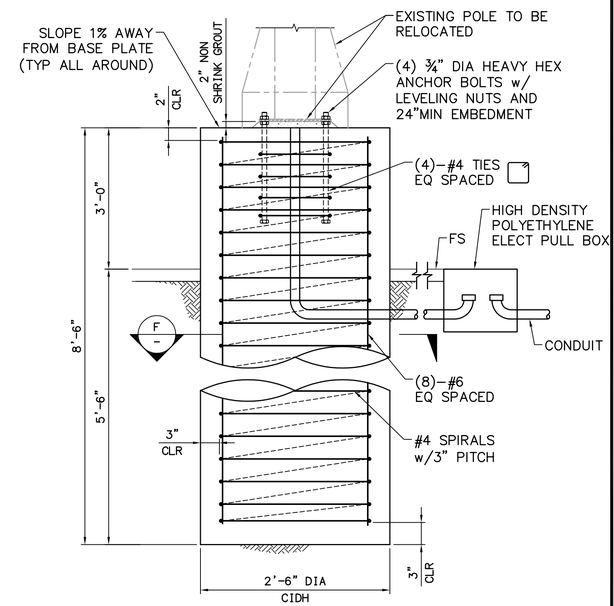


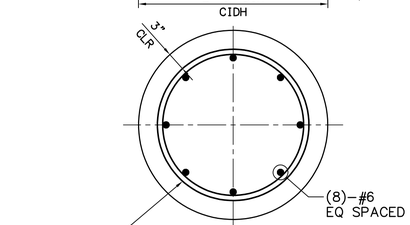


## SECTION F

NTS

## CIDH PILE FOR LIGHT POLE

SCALE: 1-1/2" = 1'-0"

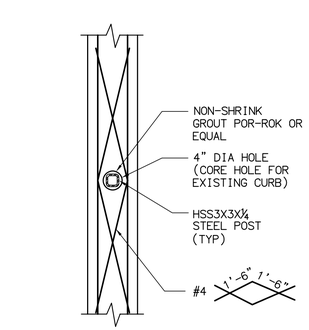


## SECTION D

SCALE: 1" = 1'-0"

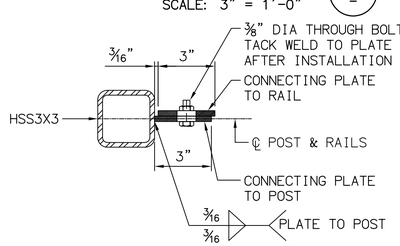


## SECTION F

SCALE: 3" = 1'-0"

## RAILING NOTES:

1. HOLLOW STEEL SECTIONS, HSS (STEEL TUBES AND PIPES) SHALL CONFORM TO ASTM A500, GRADE B.
2. PLATES AND ITEMS OF MISCELLANEOUS METALWORK SHALL CONFORM TO ASTM A36.
3. ANCHOR BOLTS SHALL CONFORM TO ASTM F1554 (GRADE 50).
4. ALL WELDING SHALL BE SHIELDED ARC TYPE AND SHALL BE PERFORMED BY A CERTIFIED WELDER IN A BUILDING DEPARTMENT APPROVED SHOP. CONTINUOUS INSPECTION IS REQUIRED OF ALL FIELD WELDING.
5. ALL STEEL EXPOSED TO WEATHER SHALL BE GALVANIZED UNLESS NOTED OTHERWISE.
6. POSTS SHALL BE GALVANIZED AND PAINTED. THE PAINT COLOR SHALL BE "ADOBE" BY "DAVIS" COLORS.
7. TOP AND BOTTOM RAILS SHALL BE GALVANIZED, EPOXY PRIMED AND PAINTED. THE PAINT COLOR SHALL BE BROWN (ONE COAT EXTERIOR ENAMEL FINISH).
8. ¾" PICKETS SHALL BE GALVANIZED, EPOXY PRIMED AND PAINTED. THE PAINT COLOR SHALL BE BROWN (ONE COAT EXTERIOR ENAMEL FINISH).

## CIDH PILE FOR LIGHT POLE NOTES:

1. CONTRACTOR SHALL VERIFY ALL CONTROLLING DIMENSIONS FOR THE EXISTING LIGHT POLE BASE PLATE AND ANCHOR BOLTS WITH THE EXISTING LIGHT POLE, ONCE REMOVED. ANY DISCREPANCY BETWEEN THE BASE PLATE AND ANCHORAGE DIMENSIONS SHALL BE COMMUNICATED WITH THE EOR.
2. CONCRETE SHALL HAVE AN ULTIMATE CONCRETE STRENGTH f'c = 3,250 PSI (TYPE V CEMENT).
3. REINFORCING TO CONFORM TO ASTM A615 (GRADE 60 NON-GALVANIZED).

COUNTY OF ORANGE CALIFORNIA

| MARK | DESCRIPTION | DATE | APPR. |
|---|---|---|---|
| | | | |

PREPARED UNDER THE RESPONSIBLE CHARGE OF: CIPRIAN STELEA, P.E.

REGISTERED PROFESSIONAL ENGINEER CIPRIAN STELEA No. 73379 Exp. 12/31/2022 CIVIL STATE OF CALIFORNIA

02/28/22 DATE

REPLACEMENT OF LAGUNA CANYON CHANNEL OCFCD FACILITY No. 102

DESIGNED BY: CS
DRAWN BY: CS
CHECKED BY: BRM
DRAWING NUMBER:
FILE NAME: XXXXXXXXXXXXXXXXXXXX
PLOT DATE: 02/28/2022
SCALE: AS SHOWN

County of Orange OC Public Works

PREPARED BY: Michael Baker INTERNATIONAL
5 Hutton Centre Drive, Suite 500, Santa Ana, CA 92707
Phone: (949) 472-3505 / MBAKERINTL.COM

LAGUNA CANYON CHANNEL REPLACEMENT
**OCFCD FACILITY NO. 102**

RAILING DETAILS

SHEET 21 OF 41

H:\PDATA\180154\CADD\STRUC\DLV\0154-S-005.DWG STELEA, CIPRIAN 3/9/2022 10:27 PM



EXHIBIT B

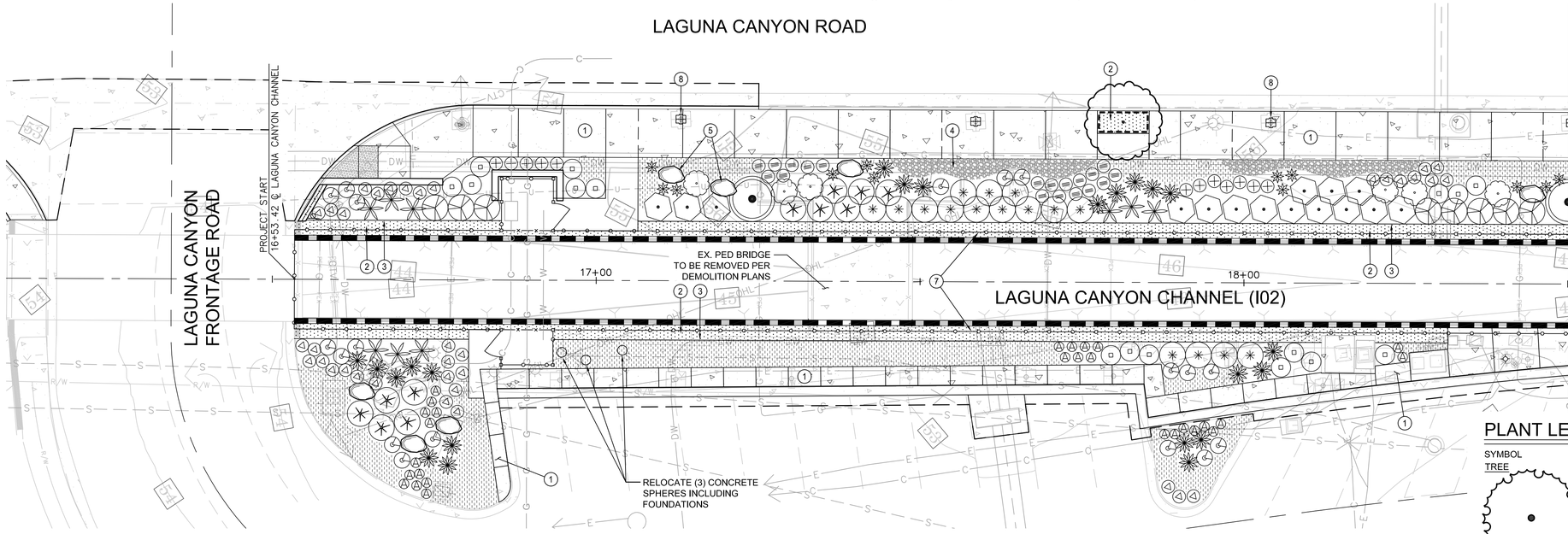


## LANDSCAPE CONSTRUCTION NOTES

1. CONCRETE PAVING PER PROPOSED CHANNEL PLANS.
2. DECOMPOSED GRANITE PER DETAIL 'F' SHEET 25.
3. STEEL EDGING PER DETAIL 'F' SHEET 25.
4. COBBLE MULCH PER DETAIL 'C' SHEET 25, TYP.
5. LANDSCAPE BOULDER PER DETAIL 'D' SHEET 25, TYP.
7. CHANNEL FENCE PER STRUCTURAL DETAILS SHEET 20, TYP.
8. PARKING METERS PER PROPOSED CHANNEL PLANS, TYP.

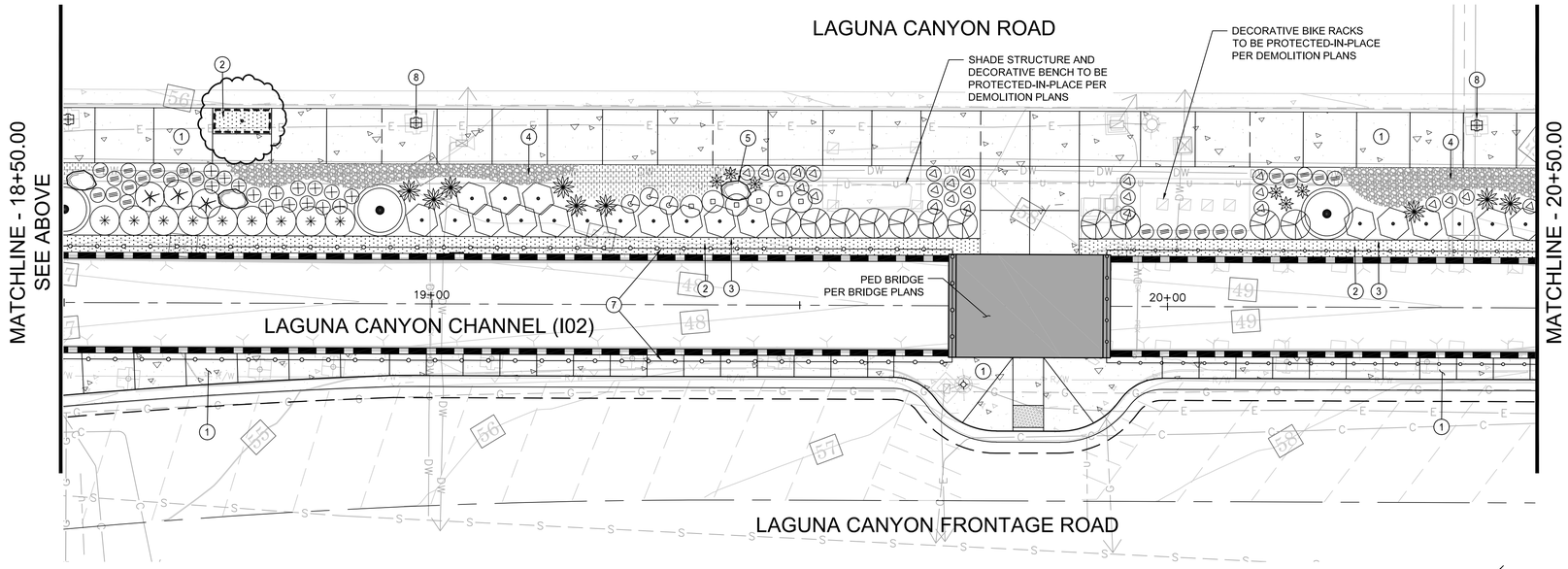


## PLANT LEGEND

| SYMBOL | BOTANICAL NAME/ COMMON NAME | SIZE | QTY | WATER USE |
|---|---|---|---|---|
| TREE | | | | |
| | PLATANUS RACEMOSA/ CALIFORNIA SYCAMORE | 24" BOX | 1 | M |
| | CERCIS OCCIDENTALIS/ WESTERN REDBUD | 24" BOX | 7 | L |
| | ROOT BARRIER | | | |
| SHRUBS/ GROUND COVER | | | | |
| | AEONIUM ARBOREUM AEONIUM | 5 GAL | 46 | L |
| | AGAVE ATTENUATA FOX TAIL AGAVE | 5 GAL | 95 | L |
| | AGAVE 'BLUE FLAME' BLUE FLAME AGAVE | 5 GAL | 54 | L |
| | ALOE BARBERAE TREE ALOE | 5 GAL | 33 | L |
| | ALOE STRIATA CORAL ALOE | 5 GAL | 79 | L |
| | BACCHARIS 'TWIN PEAKS' DWARF COYOTE BRUSH | 5 GAL | 106 | L |
| | CALANDRINIA SPECTABILIS ROCK PURSLANE | 1 GAL | 175 | L |
| | CAREX DIVULSA EUROPEAN GRAY SEDGE | 1 GAL | 147 | L |
| | CISTUS PURPUREUS ORCHID ROCKROSE | 5 GAL | 55 | L |
| | DIANELLA VARIEGATA VARIEGATED FLAX LILY | 5 GAL | 111 | L |
| | GALVEZIA SPECIOSA ISLAND BUSH SNAPDRAGON | 5 GAL | 85 | L |
| | JUNCUS PATENS CALIFORNIA GREY RUSH | 1 GAL | 58 | L |
| | BOUTELOUA GRACILIS BLUE GRAMA | 5 GAL | 76 | L |
| | RHUS INTEGRIFOLIA LEMONADE BERRY | 5 GAL | 10 | VL |
| | PHLOMIS FRUTICOSA JERUSALEM SAGE | 1 GAL | 18 | VL |
| | SENECIO MANDRALISCAE BLUE CHALK STICKS | ROOTED CUTTINGS @ 18" O.C. | 864 (FROM FLATS) | L |
| | COBBLE MULCH | 2"-4" ROCK & 4"-8" ROCK | 1,132 SF | |
| | DECOMPOSED GRANITE | | 4,963 SF | |
| | LANDSCAPE BOULDERS | | 33 | |

SEE SHEETS 25 & 26 FOR PLANTING NOTES AND DETAILS

SCALE 1"=10'

10 5 0 10 20 30

SCALE: 1"=10'

COUNTY OF ORANGE CALIFORNIA

| MARK | DESCRIPTION | DATE | APPR. |
|---|---|---|---|
| | | | |

PREPARED UNDER THE RESPONSIBLE CHARGE OF:

REGISTERED LANDSCAPE ARCHITECT JEREMY FRANZINI LIC. NO. 4514 STATE OF CALIFORNIA EXPIRES JUNE 30, 2023 PROFESSIONAL SEAL

02/28/22 DATE

JEREMY FRANZINI, LIC. NO. 4514

DESIGNED BY: JF
DRAWN BY: EC
CHECKED BY: BRM
DRAWING NUMBER:
FILE NAME: XXXXXXXXXXXXXXXXXX
PLOT DATE: 02/28/2022
SCALE: AS SHOWN

County of Orange OC Public Works

PREPARED BY: Michael Baker INTERNATIONAL
5 Hutton Centre Drive, Suite 500, Santa Ana, CA 92707
Phone: (949) 472-3505 - MBAKERINTL.COM

LAGUNA CANYON CHANNEL REPLACEMENT
OCFCD FACILITY NO. I02

PLANTING PLAN - SHEET 1

SHEET 22 OF 41

H:\PDATA\180156\CADD\LARCH\DLV\180156-022-LP1.DWG CAILLE, ELISE 3/8/2022 9:24 AM



EXHIBIT B

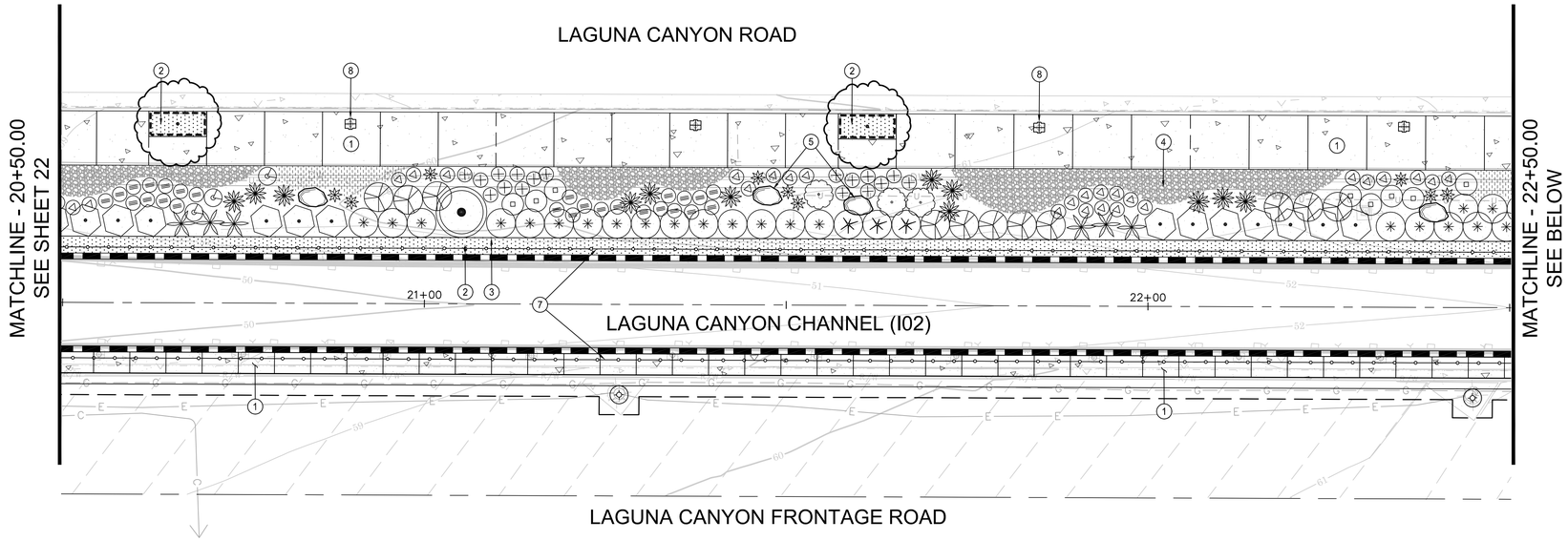


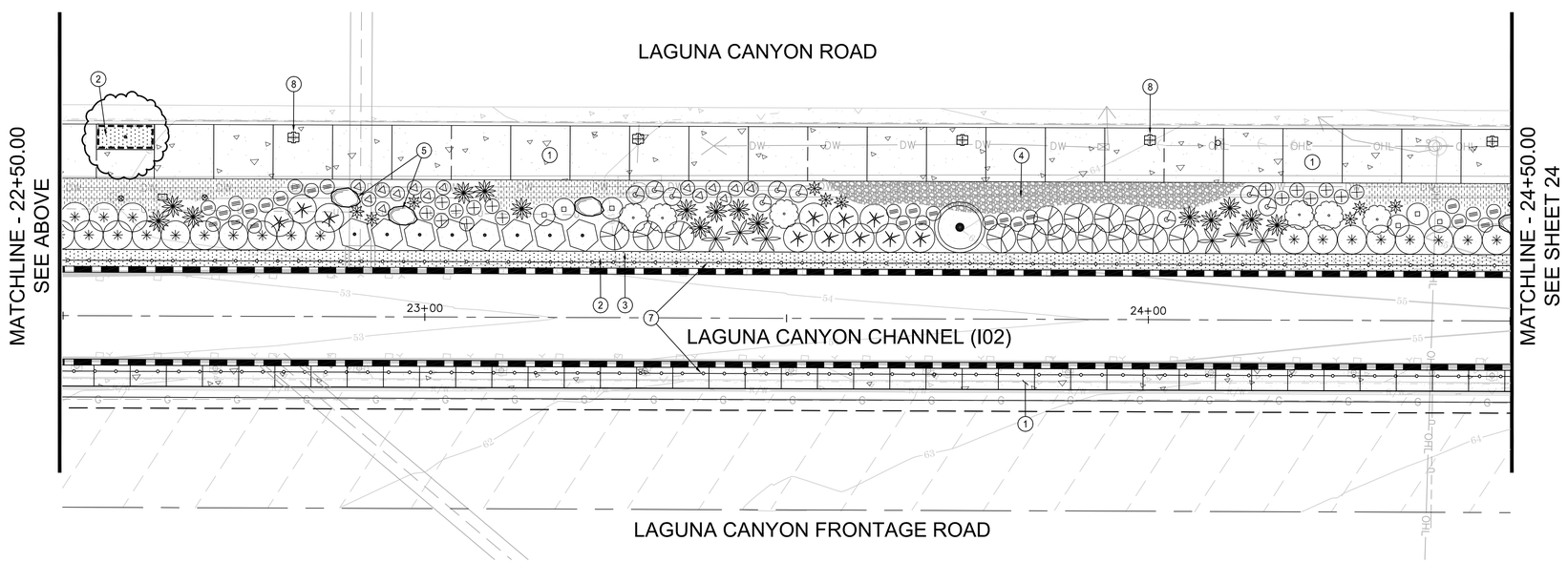


SEE SHEETS 25 & 26 FOR PLANTING NOTES AND DETAILS

## LANDSCAPE CONSTRUCTION NOTES

1. CONCRETE PAVING PER PROPOSED CHANNEL PLANS.
2. DECOMPOSED GRANITE PER DETAIL 'F' SHEET 25.
3. STEEL EDGING PER DETAIL 'F' SHEET 25.
4. COBBLE MULCH PER DETAIL 'C' SHEET 25, TYP.
5. LANDSCAPE BOULDER PER DETAIL 'D' SHEET 25, TYP.
7. CHANNEL FENCE PER STRUCTURAL DETAILS SHEET 20, TYP.
8. PARKING METERS PER PROPOSED CHANNEL PLANS, TYP.

## PLANT LEGEND

| SYMBOL | BOTANICAL NAME/ COMMON NAME | SIZE | QTY | WATER USE |
|---|---|---|---|---|
| TREE | | | | |
| | PLATANUS RACEMOSA/ CALIFORNIA SYCAMORE | 24" BOX | 1 | M |
| | CERCIS OCCIDENTALIS/ WESTERN REDBUD | 24" BOX | 7 | L |
| | ROOT BARRIER | | | |
| SHRUBS/ GROUND COVER | | | | |
| | AEONIUM ARBOREUM AEONIUM | 5 GAL | 46 | L |
| | AGAVE ATTENUATA FOX TAIL AGAVE | 5 GAL | 95 | L |
| | AGAVE 'BLUE FLAME' BLUE FLAME AGAVE | 5 GAL | 54 | L |
| | ALOE BARBERAE TREE ALOE | 5 GAL | 33 | L |
| | ALOE STRIATA CORAL ALOE | 5 GAL | 79 | L |
| | BACCHARIS 'TWIN PEAKS' DWARF COYOTE BRUSH | 5 GAL | 106 | L |
| | CALANDRINIA SPECTABILIS ROCK PURSLANE | 1 GAL | 175 | L |
| | CAREX DIVULSA EUROPEAN GRAY SEDGE | 1 GAL | 147 | L |
| | CISTUS PURPUREUS ORCHID ROCKROSE | 5 GAL | 55 | L |
| | DIANELLA VARIEGATA VARIEGATED FLAX LILY | 5 GAL | 111 | L |
| | GALVEZIA SPECIOSA ISLAND BUSH SNAPDRAGON | 5 GAL | 85 | L |
| | JUNCUS PATENS CALIFORNIA GREY RUSH | 1 GAL | 58 | L |
| | BOUTELOUA GRACILIS BLUE GRAMA | 5 GAL | 76 | L |
| | RHUS INTEGRIFOLIA LEMONADE BERRY | 5 GAL | 10 | VL |
| | PHLOMIS FRUTICOSA JERUSALEM SAGE | 1 GAL | 18 | VL |
| | SENECIO MANDRALISCAE BLUE CHALK STICKS | ROOTED CUTTINGS @ 18" O.C. | 864 (FROM FLATS) | L |
| | COBBLE MULCH | 2"-4" ROCK & 4"-8" ROCK | 1,132 SF | |
| | DECOMPOSED GRANITE | | 4,963 SF | |
| | LANDSCAPE BOULDERS | | 33 | |

SCALE 1"=10'

10 5 0 10 20 30

SCALE: 1"=10'

COUNTY OF ORANGE CALIFORNIA

| MARK | DESCRIPTION | DATE | APPR. |
|---|---|---|---|
| | | | |

PREPARED UNDER THE RESPONSIBLE CHARGE OF:

REGISTERED LANDSCAPE ARCHITECT JEREMY FRANZINI LIC. NO. 4514 STATE OF CALIFORNIA

02/28/22
DATE

JEREMY FRANZINI, LIC. NO. 4514

DESIGNED BY: JF
DRAWN BY: EC
CHECKED BY: BRM
DRAWING NUMBER:
FILE NAME: XXXXXXXXXXXXXXXXXX
PLOT DATE: 02/28/2022
SCALE: AS SHOWN

County of Orange
OC Public Works

PREPARED BY:
Michael Baker INTERNATIONAL
5 Hutton Centre Drive, Suite 500, Santa Ana, CA 92707
Phone: (949) 472-3505 / MBAKERINTL.COM

LAGUNA CANYON CHANNEL REPLACEMENT
OCFCD FACILITY NO. I02

PLANTING PLAN - SHEET 2

SHEET
23
SHEET 23 OF 41

H:\PDATA\180156\CADD\LARCH\DLV\180156-023-LP2.DWG CAILLE, ELISE 2/23/2022 3:57 PM



EXHIBIT B

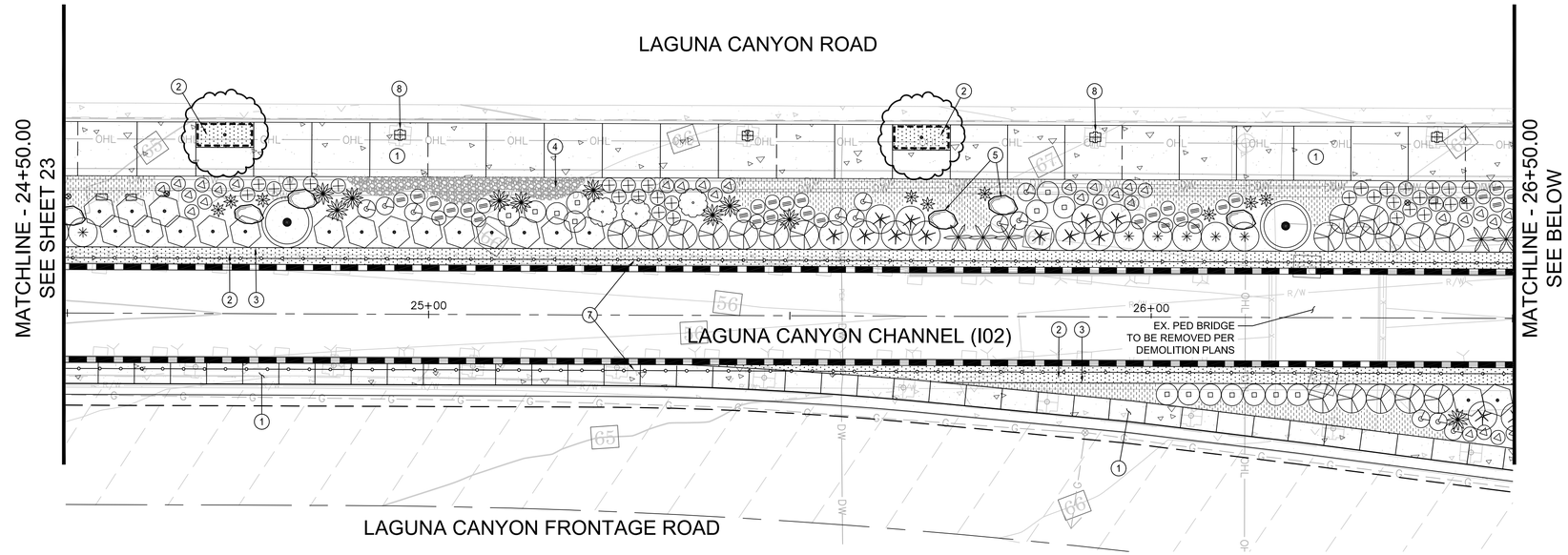


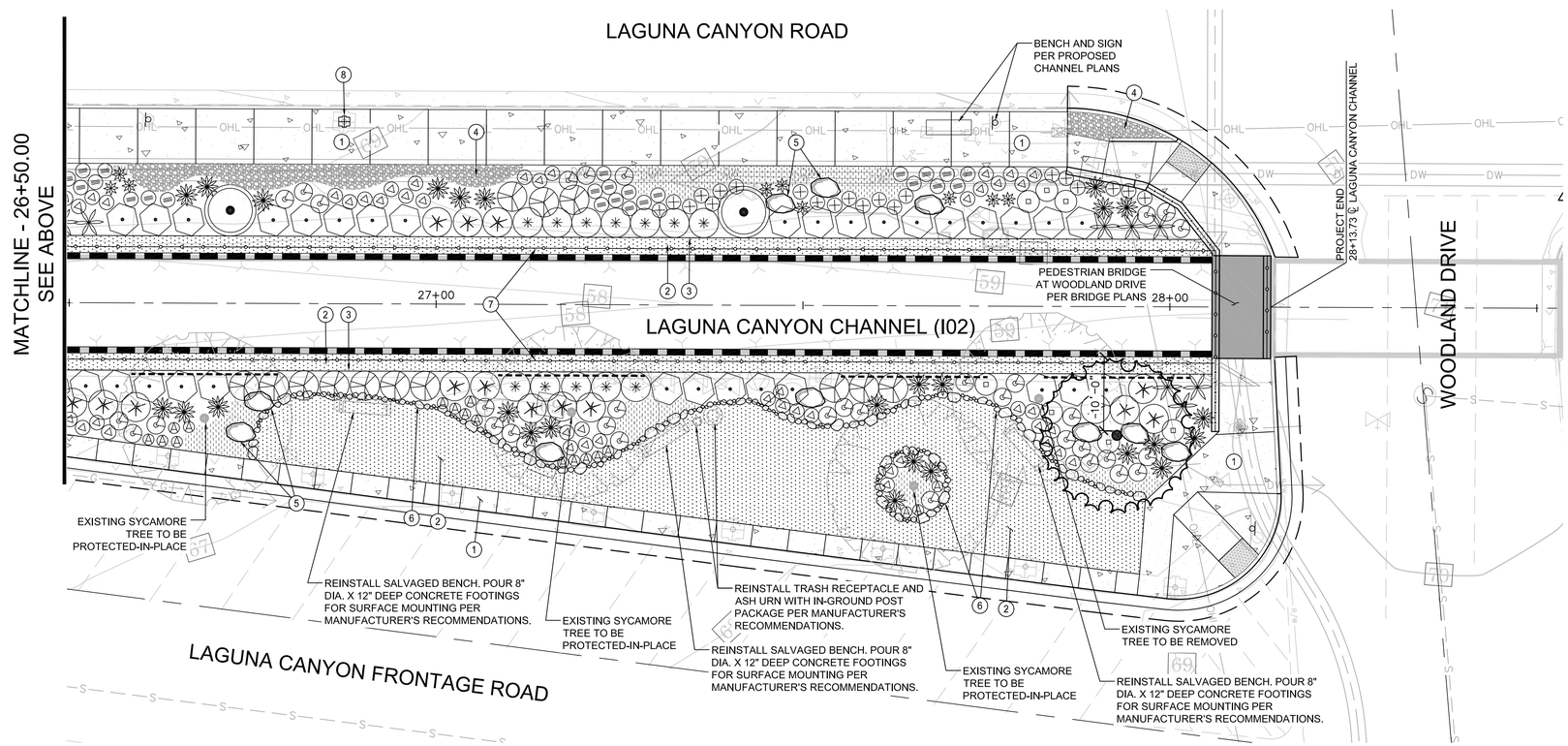


SEE SHEETS 25 & 26 FOR
PLANTING NOTES AND DETAILS

## LANDSCAPE CONSTRUCTION NOTES

1. CONCRETE PAVING PER PROPOSED CHANNEL PLANS.
2. DECOMPOSED GRANITE PER DETAIL 'F' SHEET 25.
3. STEEL EDGING PER DETAIL 'F' SHEET 25.
4. COBBLE MULCH PER DETAIL 'C' SHEET 25, TYP.
5. LANDSCAPE BOULDER PER DETAIL 'D' SHEET 25, TYP.
6. ROCK PLANTER EDGE PER DETAIL 'E' SHEET 25, TYP.
7. CHANNEL FENCE PER STRUCTURAL DETAILS SHEET 20, TYP.
8. PARKING METERS PER PROPOSED CHANNEL PLANS, TYP.

## PLANT LEGEND

| SYMBOL | BOTANICAL NAME/ COMMON NAME | SIZE | QTY | WATER USE |
|---|---|---|---|---|
| TREE | | | | |
| | PLATANUS RACEMOSA/ CALIFORNIA SYCAMORE | 24" BOX | 1 | M |
| | CERCIS OCCIDENTALIS/ WESTERN REDBUD | 24" BOX | 7 | L |
| | ROOT BARRIER | | | |
| SHRUBS/ GROUND COVER | | | | |
| | AEONIUM ARBOREUM AEONIUM | 5 GAL | 46 | L |
| | AGAVE ATTENUATA FOX TAIL AGAVE | 5 GAL | 95 | L |
| | AGAVE 'BLUE FLAME' BLUE FLAME AGAVE | 5 GAL | 54 | L |
| | ALOE BARBERAE TREE ALOE | 5 GAL | 33 | L |
| | ALOE STRIATA CORAL ALOE | 5 GAL | 79 | L |
| | BACCHARIS 'TWIN PEAKS' DWARF COYOTE BRUSH | 5 GAL | 106 | L |
| | CALANDRINIA SPECTABILIS ROCK PURSLANE | 1 GAL | 175 | L |
| | CAREX DIVULSA EUROPEAN GRAY SEDGE | 1 GAL | 147 | L |
| | CISTUS PURPUREUS ORCHID ROCKROSE | 5 GAL | 55 | L |
| | DIANELLA VARIEGATA VARIEGATED FLAX LILY | 5 GAL | 111 | L |
| | GALVEZIA SPECIOSA ISLAND BUSH SNAPDRAGON | 5 GAL | 85 | L |
| | JUNCUS PATENS CALIFORNIA GREY RUSH | 1 GAL | 58 | L |
| | BOUTELOUA GRACILIS BLUE GRAMA | 5 GAL | 76 | L |
| | RHUS INTEGRIFOLIA LEMONADE BERRY | 5 GAL | 10 | VL |
| | PHLOMIS FRUTICOSA JERUSALEM SAGE | 1 GAL | 18 | VL |
| | SENECIO MANDRALISCAE BLUE CHALK STICKS | ROOTED CUTTINGS @ 18" O.C. | 864 (FROM FLATS) | L |
| | COBBLE MULCH | 2"-4" ROCK & 4"-8" ROCK | 1,132 SF | |
| | DECOMPOSED GRANITE | | 4,963 SF | |
| | LANDSCAPE BOULDERS | | 33 | |

SCALE 1"=10'

10 5 0 10 20 30

SCALE: 1"=10'

COUNTY OF ORANGE CALIFORNIA

| MARK | DESCRIPTION | DATE | APPR. |
|---|---|---|---|

PREPARED UNDER THE RESPONSIBLE CHARGE OF:
REGISTERED LANDSCAPE ARCHITECT
JEREMY FRANZINI, LIC. NO. 4514
STATE OF CALIFORNIA
JEREMY FRANZINI
LIC. NO. 4514
JUNE 30, 2023
REGISTRATION EXPIRATION DATE
02/28/22
DATE
JEREMY FRANZINI, LIC. NO. 4514

DESIGNED BY: JF
DRAWN BY: EC
CHECKED BY: BRM
DRAWING NUMBER:
FILE NAME: XXXXXXXXXXXXXXXXXX
PLOT DATE: 02/28/2022
SCALE: AS SHOWN

County of Orange
OC Public Works

PREPARED BY:
Michael Baker
INTERNATIONAL
5 Hutton Centre Drive, Suite 500, Santa Ana, CA 92707
Phone: (949) 472-3505 - MBAKERINTL.COM

LAGUNA CANYON CHANNEL
REPLACEMENT
OCFCD FACILITY NO. I02

PLANTING PLAN - SHEET 3

SHEET
24
SHEET 24 OF 41

H:\PDATA\180156\CADD\LARCH\DLV\180156-024-LP3.DWG CAILLE, ELISE 3/8/2022 9:39 AM

1. SHRUB ROOTBALL.
2. DIG PLANTING PIT TWO TIMES THE DIAMETER AND ONE TIMES THE DEPTH OF THE ROOTBALL. SCARIFY SIDES OF PLANT PIT.
3. SET THE ROOTBALL IN THE PLANTING PIT SO THAT ROOT CROWN IS 1" ABOVE FINISH GRADE.
4. PLACE BACKFILL MATERIAL PER THE SPECIFICATIONS, TAMPING AND SETTLING AROUND ROOTBALL.
5. PLANTING TABLETS PER THE SPECIFICATIONS.
6. CREATE 4" IRRIGATION BASIN AT THE EDGE OF THE PLANTING PIT.
7. IRRIGATE WITH HOSE TO SETTLE BACKFILL AND BERM, FILLING BASIN. TAMP TO REMOVE AIR POCKETS AND ADD ADDITIONAL BACKFILL AS NECESSARY.
8. INSTALL 4" LAYER OF BARK MULCH PER THE SPECIFICATIONS. INSTALL 3" AWAY FROM PLANT CENTER.
9. EXISTING SUBGRADE.

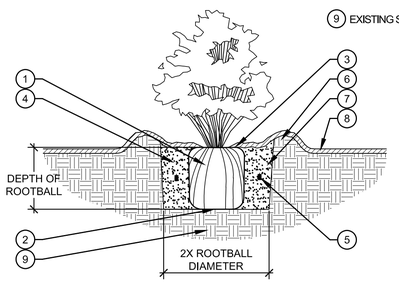


## A SHRUB PLANTING N.T.S.

1. CONCRETE CURB/PAVING EDGE.
2. SHRUB/GROUNDCOVER PLANT.
3. PLANTING TABLET PER THE SPECIFICATIONS.
4. TILLED PLANTING BED PER THE SPECIFICATIONS.
5. INSTALL 4" LAYER OF BARK MULCH PER THE SPECIFICATIONS. INSTALL 3" AWAY FROM PLANT CENTER.
6. EXISTING SUBGRADE.

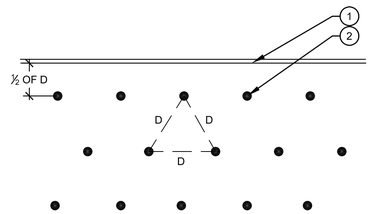


PLAN VIEW

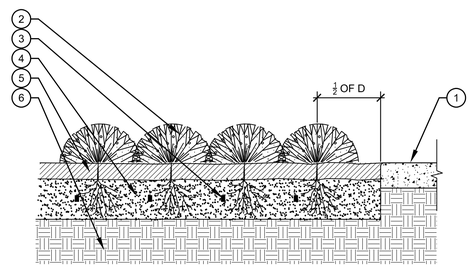


SECTION VIEW

NOTES:
1. INSTALL PLANTS SPACED EQUIDISTANT (D) FROM EACH OTHER AS INDICATED IN THE PLANT LEGEND.

## B GROUNDCOVER SPACING N.T.S.

1. 2"-4" ROCK PER THE SPECIFICATIONS.
2. 8" THICK ROCK PER THE SPECIFICATIONS. INSTALL 4"-8" THICK ROCK FIRST, THEN USE 2"-4" THICK ROCK TO FILL IN VOIDS BETWEEN 4"-8" ROCK.
3. FILTER FABRIC.
4. CONCRETE PAVING PER PROPOSED CHANNEL PLANS.
5. 90% MOISTURE COMPACTED SUBGRADE.
6. PLANTING AREA.

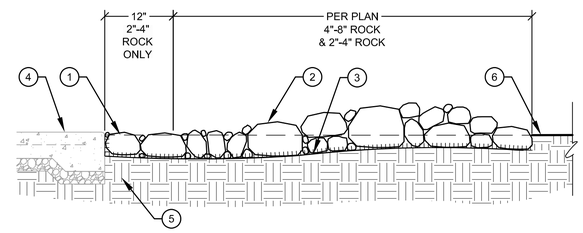


## C COBBLE MULCH N.T.S.

## PLANTING NOTES

1. PLANTING WORK SHALL CONFORM TO THE STANDARD SPECIFICATIONS FOR PUBLIC WORKS CONSTRUCTION "GREEN BOOK" LATEST EDITION (A COPY SHALL BE KEPT ON THE SITE AT ALL TIMES) AND THE SPECIFICATION SPECIAL PROVISIONS.
2. PLANT QUANTITIES ARE SHOWN FOR CONTRACTOR'S CONVENIENCE IN ESTIMATING ONLY. THE CONTRACTOR IS RESPONSIBLE FOR PROVIDING THE PLANT MATERIAL FOR EACH SYMBOL SHOWN ON THE PLANTING PLAN.
3. ALL WORK SHALL BE SUBJECT TO THE COUNTY RESIDENT ENGINEER'S ACCEPTANCE AS A CONDITION OF COMPLETION OF WORK BY THE CONTRACTOR.
4. THE PLANTING PLAN IS DIAGRAMMATIC. MINOR ADJUSTMENTS IN PLANT LOCATIONS MAY BE MADE AT THE DISCRETION OF THE PROJECT LANDSCAPE ARCHITECT OR THE COUNTY RESIDENT ENGINEER.
5. ALL PLANT MATERIAL SHALL BE SUBJECT TO REVIEW AND APPROVAL BY THE PROJECT LANDSCAPE ARCHITECT OR THE COUNTY RESIDENT ENGINEER PRIOR TO INSTALLATION. SEE THE SPECIFICATIONS FOR ADDITIONAL REQUIREMENTS.
6. ALL NURSERY TYING MATERIAL AND MARKING TAPES SHALL BE REMOVED AT THE TIME OF PLANTING.
7. THE CONTRACTOR SHALL VERIFY THE EXACT LOCATIONS OF ALL EXISTING UTILITIES, SITE CONDITIONS, STRUCTURES, PROPERTY LINES, AND SERVICES BEFORE COMMENCING WORK TO ENSURE THAT THERE IS NO DAMAGE DURING CONSTRUCTION. THE LOCATIONS OF THESE CONDITIONS SHOWN IN THESE PLANS ARE APPROXIMATE ONLY. ANY DISCREPANCIES BETWEEN THESE PLANS AND ACTUAL FIELD CONDITIONS SHALL BE REPORTED TO THE COUNTY RESIDENT ENGINEER. THE CONTRACTOR IS RESPONSIBLE TO REPAIR AND REPLACE ANY DAMAGE TO EXISTING UTILITIES DURING CONSTRUCTION WITH NO ADDITIONAL COST TO THE OWNER.
8. PLANT MATERIAL LOCATED ADJACENT TO ANY LIGHT STANDARDS, UTILITY EQUIPMENT, OR DRIVEWAYS, ETC. SHALL BE ADJUSTED TO MAINTAIN A SUITABLE CLEARANCE AS APPROVED BY THE COUNTY RESIDENT ENGINEER. TREES SHALL NOT BE INSTALLED OVER UNDERGROUND UTILITIES.
9. ALL PLANTING AREAS SHALL HAVE A 4" LAYER OF BARK MULCH PER THE SPECIFICATIONS.
10. SEE THE SPECIFICATION SPECIAL PROVISIONS FOR ADDITIONAL REQUIREMENTS.

1. LANDSCAPE BOULDER PER THE PLANTING PLANS AND SPECIFICATIONS.
2. FINISHED GRADE.
3. 90% MOISTURE COMPACTED SUBGRADE BELOW BOULDER LOCATIONS.

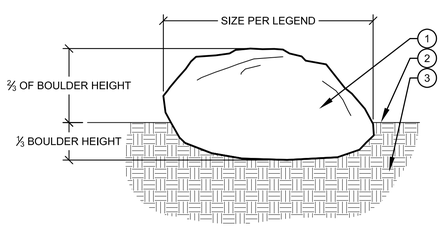

FLAT BOULDER
SET TO HIDE FLAT SIDE AND EDGES

FRACTURED BOULDER
SET TO HIDE BROKEN EDGES

NOTES:
1. BOULDERS SHALL NOT BE EVENLY SPACED APART AND SHALL BE GROUPED AS SHOWN ON THE PLANTING PLANS TO APPEAR NATURAL IN THE LANDSCAPE.
2. THE BOULDERS SHALL BE PER THE SPECIFICATIONS. THE CONTRACTOR SHALL SUBMIT PHOTOGRAPHS OF THE BOULDERS TO THE CITY FOR APPROVAL PRIOR TO ORDERING AND DELIVERING.
3. THE BOULDER LOCATIONS AND PLACEMENT SHALL BE APPROVED BY THE LANDSCAPE ARCHITECT PRIOR TO PLACEMENT.

## D LANDSCAPE BOULDER N.T.S.

1. CONCRETE SETTING BED - 4" MIN. THICKNESS
2. VARIOUS SIZE STONE FOR EDGING, 8" DIA. MIN. TO 12" DIA. MAX. "HEADSIZE"
3. PEDESTRIAN AREA
4. FINISH GRADE @ PLANTING AREA
5. SUBGRADE

ELEVATION

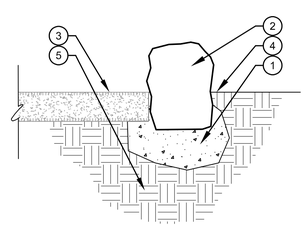

SECTION

## E ROCK PLANTER EDGE N.T.S.

1. 3" THICK DECOMPOSED GRANITE WITH STABILIZER PER THE MANUFACTURER'S SPECIFICATIONS. INSTALL FLUSH WITH ADJACENT PAVING.
2. FINISH GRADE.
3. 90% MOISTURE COMPACTED SUBGRADE.
4. APPLY PRE-EMERGENT HERBICIDE AND POST-EMERGENT HERBICIDE TO SUBGRADE PRIOR TO INSTALLATION.
5. APPLY PRE-EMERGENT HERBICIDE TO DECOMPOSED GRANITE AFTER INSTALLATION.
6. STEEL EDGING. USE WHEN ADJACENT TO PLANTING AREA.
7. CONCRETE PAVING PER PROPOSED CHANNEL PLANS.

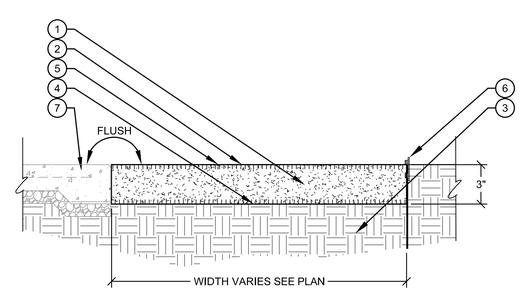


## F DECOMPOSED GRANITE N.T.S.

1. TREE ROOTBALL.
2. DIG PLANTING PIT TWO TIMES THE DIAMETER AND ONE TIMES THE DEPTH OF THE ROOTBALL. SCARIFY SIDES OF PLANT PIT.
3. SET THE ROOTBALL IN THE PLANTING PIT SO THAT ROOT CROWN IS 1" ABOVE FINISH GRADE.
4. PLACE BACKFILL MATERIAL PER THE SPECIFICATIONS, TAMPING AND SETTLING AROUND ROOTBALL.
5. PLANTING TABLETS PER THE SPECIFICATIONS.
6. CREATE 4" IRRIGATION BASIN AT THE EDGE OF THE PLANTING PIT.
7. IRRIGATE WITH HOSE TO SETTLE BACKFILL AND BERM, FILLING BASIN. TAMP TO REMOVE AIR POCKETS AND ADD ADDITIONAL BACKFILL AS NECESSARY.
8. STAKE BELOW CROWN OF TREE.
9. TREE TIES (4 PER TREE) - V.I.T. PRODUCTS CINCH-TIE OR APPROVED EQUAL.
10. 2" DIAMETER X 10' LONG LODGEPOLE PINE STAKE (2 PER TREE) INSTALLED OUTSIDE OF THE TREE ROOTBALL. LOCATE STAKES PARALLEL TO THE DIRECTION OF THE PREVAILING WIND AND DRIVE FIRMLY INTO THE SUBGRADE A MINIMUM OF 3'.
11. ROOT BARRIER PER DETAIL "A" SHEET 26 AND THE ARBORIST REPORT. INSTALL 3" BELOW FINISH GRADE.
12. INSTALL 4" LAYER OF BARK MULCH PER THE SPECIFICATIONS. INSTALL 3" AWAY FROM PLANT CENTER.
13. CONCRETE PAVING OR STEEL EDGING.
14. EXISTING SUBGRADE.

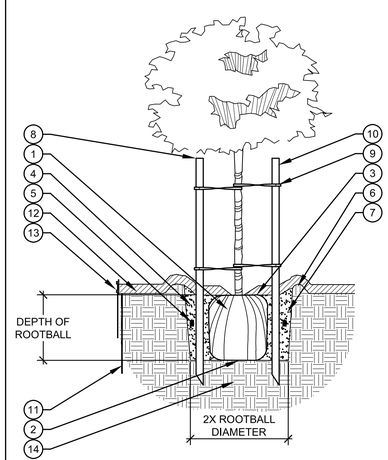


## G TREE PLANTING/STAKING N.T.S.

| MARK | DESCRIPTION | DATE | APPR. |
|---|---|---|---|
| | | | |

PREPARED UNDER THE RESPONSIBLE CHARGE OF:
JEREMY FRANZINI, LIC. NO. 4514 — 02/28/22 DATE

DESIGNED BY: JF
DRAWN BY: EC
CHECKED BY: BRM
DRAWING NUMBER:
FILE NAME: XXXXXXXXXXXXXXXXXXXX
PLOT DATE: 02/28/2022
SCALE: AS SHOWN

PREPARED BY: Michael Baker INTERNATIONAL
County of Orange OC Public Works

LAGUNA CANYON CHANNEL REPLACEMENT
OCFCD FACILITY NO. I02

PLANTING NOTES AND DETAILS - SHEET 1

SHEET 25
SHEET 25 OF 41

H:\PDATA\180156\CADD\LARCH\DLV\180156-025-LD1.DWG CAILLE, ELISE 2/23/2022 4:07 PM



EXHIBIT B

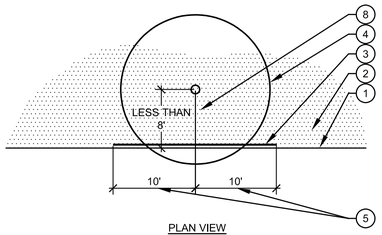


PLAN VIEW

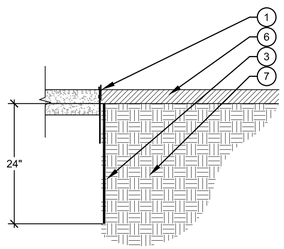


SECTION VIEW

1. CONCRETE PAVING/CURB OR STEEL EDGING.
2. PLANTING AREA.
3. CONTINUOUS ROOT BARRIER. 24" DEPTH WITH RAISED DEFLECTOR FACING THE PLANTING AREA. LOCATE ADJACENT TO THE EDGE OF PAVING. INSTALL 3" BELOW TOP OF CURB.
4. TREE.
5. PROVIDE A MINIMUM OF 10' OF BARRIER ON EACH SIDE OF THE TREE TRUNK.
6. INSTALL 4" LAYER OF BARK MULCH PER THE SPECIFICATIONS. INSTALL 3" AWAY FROM PLANT CENTER.
7. EXISTING SUBGRADE.
8. INSTALL WHEN TREE IS WITHIN 8' OF CURB/PAVING EDGE AND WHERE SHOWN ON THE PLANTING PLANS.

## A TREE ROOT BARRIER

N.T.S.

COUNTY OF ORANGE CALIFORNIA

| MARK | DESCRIPTION | DATE | APPR. |
|---|---|---|---|
| | | | |

PREPARED UNDER THE RESPONSIBLE CHARGE OF:

REGISTERED LANDSCAPE ARCHITECT TIMOTHY J. FOLEY LIC. NO. 4514 STATE OF CALIFORNIA JEREMY FRANZINI JUNE 30, 2023 RENEWAL DATE

02/28/22
DATE

JEREMY FRANZINI, LIC. NO. 4514

County of Orange
OC Public Works

DESIGNED BY: JF
DRAWN BY: EC
CHECKED BY: BRM
DRAWING NUMBER:

PREPARED BY:
Michael Baker INTERNATIONAL
5 Hutton Centre Drive, Suite 500, Santa Ana, CA 92707
Phone: (949) 472-3505 / MBAKERINTL.COM

FILE NAME: XXXXXXXXXXXXXXXXXX
PLOT DATE: 02/28/2022
SCALE: AS SHOWN

LAGUNA CANYON CHANNEL REPLACEMENT
OCFCD FACILITY NO. I02

PLANTING NOTES AND DETAILS - SHEET 2

SHEET
26
SHEET 26 OF 41

H:\PDATA\180156\CADD\LARCH\DLV\180156-026-LD2.DWG CAILLE, ELISE 2/23/2022 4:08 PM



EXHIBIT B

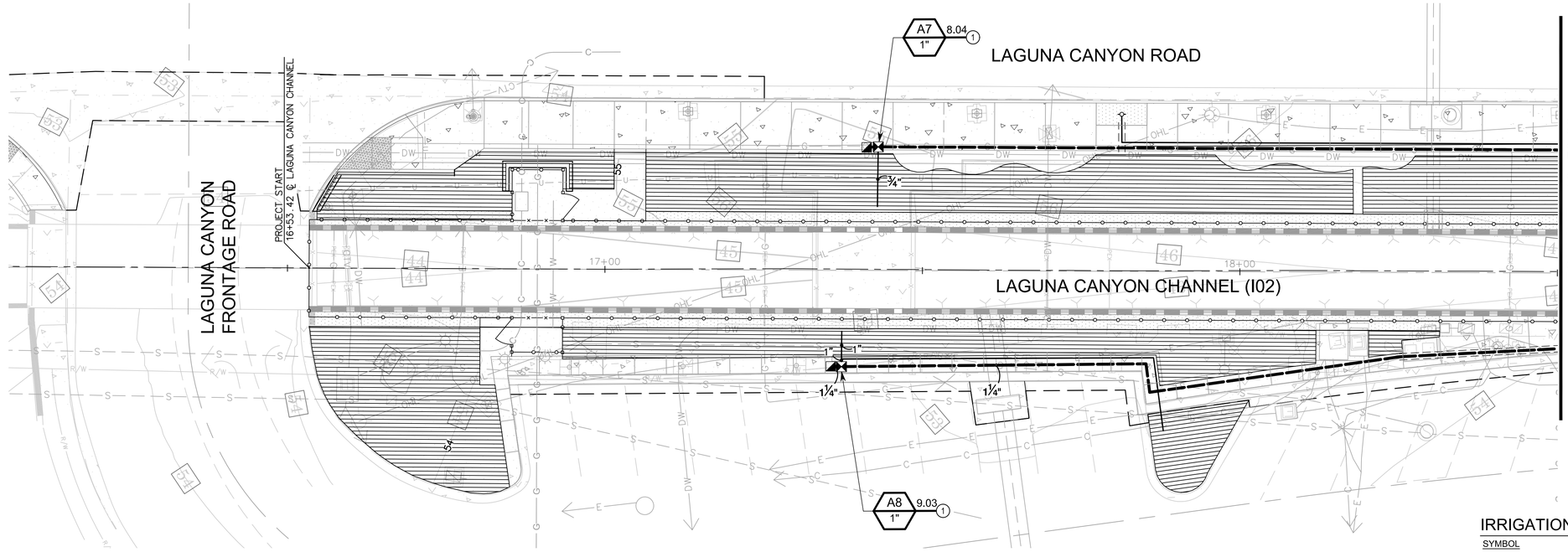


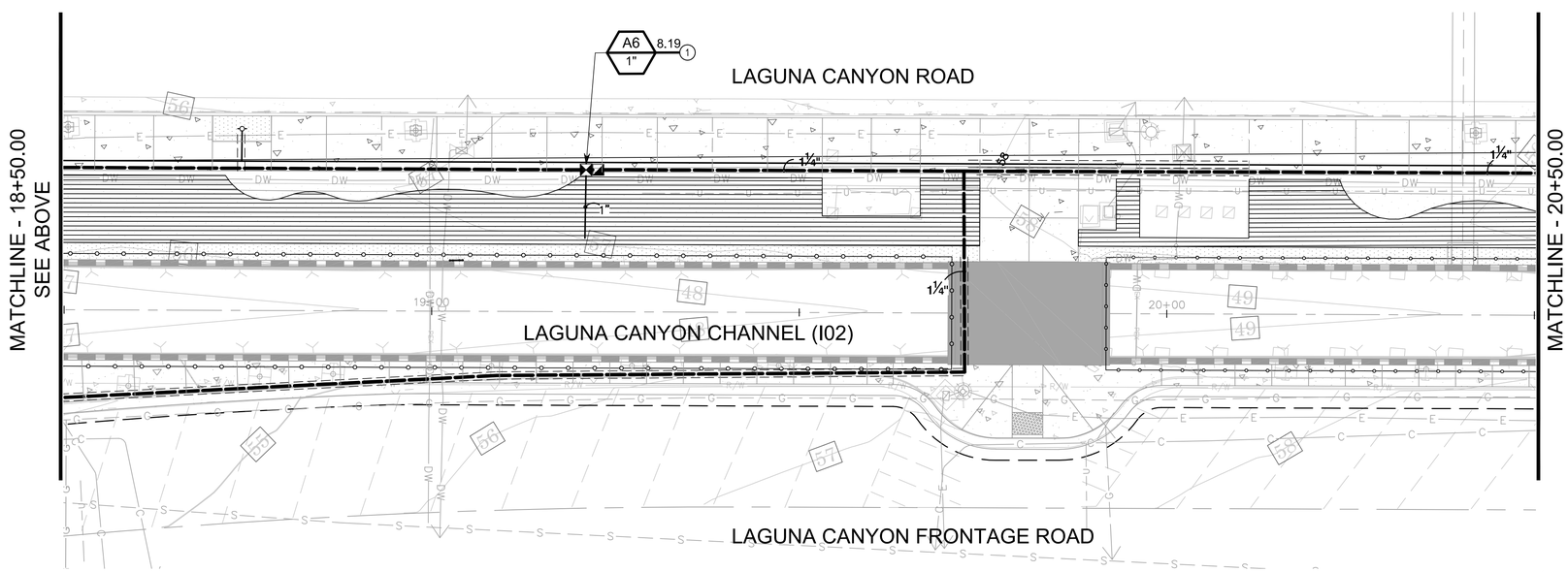


## IRRIGATION LEGEND

| SYMBOL | MANUFACTURER/MODEL | ARC | PSI | GPM | RADIUS |
|---|---|---|---|---|---|
| | RAIN BIRD RWS-B-C 1402<br>(INSTALL 2 PER TREE) | 360 | 30 | 0.5 | 3' |

| SYMBOL | MANUFACTURER/MODEL/DESCRIPTION |
|---|---|
| | RAIN BIRD XCZ-100-PRB-COM 1"<br>NEW WIDE FLOW DRIP CONTROL KIT FOR COMMERCIAL APPLICATIONS. 1" BALL VALVE WITH 1" PESB VALVE AND 1" PRESSURE REGULATING 40PSI QUICK-CHECK BASKET FILTER. 0.3GPM TO 20GPM. |
| | RAIN BIRD XCZ-150-LCDR 1-1/2"<br>NEW HIGH FLOW CONTROL ZONE KIT, FOR LARGE COMMERCIAL DRIP ZONES. 1-1/2" PESB-R SCRUBBER GLOBE VALVE WITH SINGLE 1-1/2" PRESSURE REGULATING (40PSI) QUICK-CHECK BASKET FILTERS. FLOW RANGE: 15-62GPM. |
| | AREA TO RECEIVE DRIPLINE<br>RAIN BIRD XFS-CV-09-18<br>NEW XFS-CV ON-SURFACE LANDSCAPE DRIPLINE WITH A HEAVY-DUTY 4.3 PSI CHECK VALVE. 0.9 GPH EMITTERS AT 18" O.C. DRIPLINE LATERALS SPACED AT 18" APART, WITH EMITTERS OFFSET FOR TRIANGULAR PATTERN. SPECIFY XF INSERT FITTINGS. |
| | RAIN BIRD 44-LRC 1"<br>NEW 1" BRASS QUICK-COUPLING VALVE, WITH CORROSION-RESISTANT STAINLESS STEEL SPRING, LOCKING THERMOPLASTIC RUBBER COVER, AND 2-PIECE BODY. |
| M1 M2 | GRISWOLD 2000 1"<br>EXISTING NORMALLY CLOSED MASTER VALVE - PROTECT IN PLACE. FIELD VERIFY AND TEST FOR PROPER OPERATION, REPAIR OR REPLACE IF DAMAGED. |
| BF1 BF2 | FEBCO 825YA 1"<br>EXISTING REDUCED PRESSURE BACKFLOW PREVENTER - PROTECT IN PLACE. FIELD VERIFY AND TEST FOR PROPER OPERATION, REPAIR OR REPLACE IF DAMAGED. |
| A B | IMPERIAL TECHNICAL SERVICES ICA7AS-HP3-12/SP/HP3SP-3/IFS-100C/SLR1-100/POLE4-10<br>12 STATION SOLAR CONTROLLER ASSEMBLY BY IMPERIAL TECHNICAL SERVICES (ITS). CONTACT DARYL GREEN AT (949) 584-7311. |
| FS | IMPERIAL TECHNICAL SERVICES IFS-100C<br>NEW 1" FLOW SENSOR AS PART OF CONTROLLER ASSEMBLY ABOVE. |
| M1 M2 | EXISTING 1" DOMESTIC WATER METER - FIELD VERIFY, PROTECT IN PLACE |
| | IRRIGATION LATERAL LINE: PVC SCHEDULE 40 |
| | IRRIGATION MAINLINE: PVC SCHEDULE 40 1 1/2" |
| | PIPE SLEEVE: PVC SCHEDULE 40<br>TYPICAL PIPE SLEEVE FOR IRRIGATION PIPE AND CONTROL WIRE UNDER PAVING. SEE NOTE 29 ON SHEET 25. |

VALVE CALL OUT
VALVE SIZE
VALVE NUMBER
VALVE FLOW (GPM)
HYDROZONE NUMBER
1=LOW WATER USE PLANT W/ DRIP
2=MEDIUM WATER USE TREE W/ BUBBLER

SCALE 1"=10'

10 5 0 10 20 30
SCALE: 1"=10'

SEE SHEETS 30-32 FOR IRRIGATION NOTES AND DETAILS

| MARK | DESCRIPTION | DATE | APPR. |
|---|---|---|---|
| | | | |

PREPARED UNDER THE RESPONSIBLE CHARGE OF:
REGISTERED LANDSCAPE ARCHITECT
JEREMY FRANZINI, LIC. NO. 4514
STATE OF CALIFORNIA
JEREMY FRANZINI
No. 4514
LANDSCAPE ARCHITECT
JUNE 30, 2023
RENEWAL DATE
02/28/22
DATE

JEREMY FRANZINI, LIC. NO. 4514

DESIGNED BY: JF
DRAWN BY: EC
CHECKED BY: BRM
DRAWING NUMBER:
FILE NAME: XXXXXXXXXXXXXXXXXX
PLOT DATE: 02/28/2022
SCALE: AS SHOWN

County of Orange
OC Public Works

PREPARED BY:
Michael Baker INTERNATIONAL
5 Hutton Centre Drive, Suite 500, Santa Ana, CA 92707
Phone: (949) 472-3505 / MBAKERINTL.COM

LAGUNA CANYON CHANNEL REPLACEMENT
OCFCD FACILITY NO. I02

IRRIGATION PLAN - SHEET 1

SHEET
27
SHEET 27 OF 41

H:\PDATA\180156\CADD\LARCH\DLV\180156-027-IR1.DWG CAILLE, ELISE 3/8/2022 9:23 AM

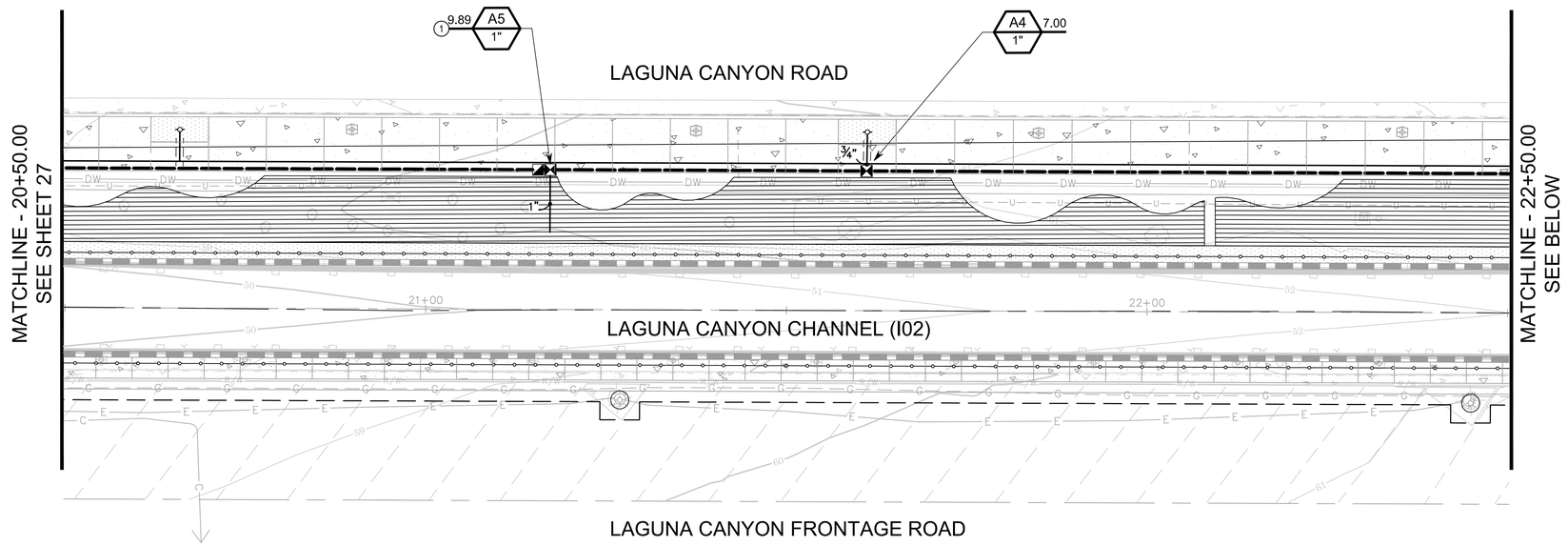


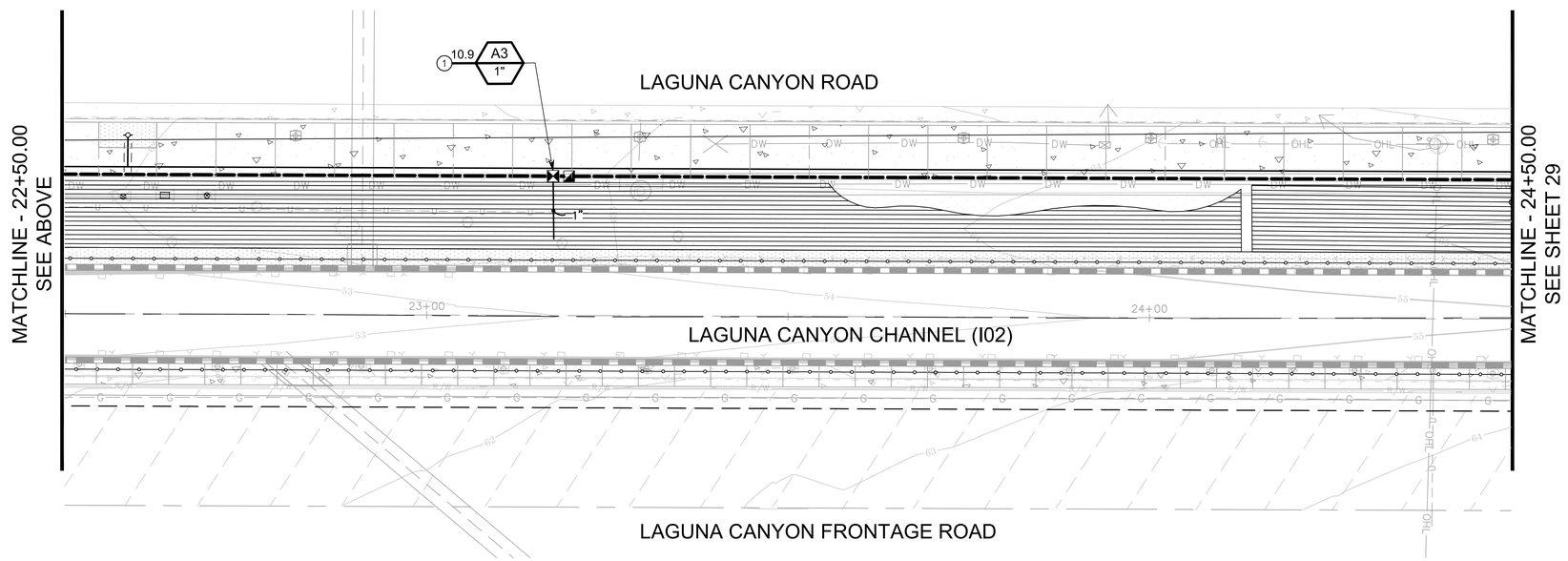


SEE SHEETS 30-32 FOR IRRIGATION NOTES AND DETAILS

## IRRIGATION LEGEND

| SYMBOL | MANUFACTURER/MODEL | ARC | PSI | GPM | RADIUS |
|---|---|---|---|---|---|
| | RAIN BIRD RWS-B-C 1402 (INSTALL 2 PER TREE) | 360 | 30 | 0.5 | 3' |

| SYMBOL | MANUFACTURER/MODEL/DESCRIPTION |
|---|---|
| | RAIN BIRD XCZ-100-PRB-COM 1" NEW WIDE FLOW DRIP CONTROL KIT FOR COMMERCIAL APPLICATIONS. 1" BALL VALVE WITH 1" PESB VALVE AND 1" PRESSURE REGULATING 40PSI QUICK-CHECK BASKET FILTER. 0.3GPM TO 20GPM. |
| | RAIN BIRD XCZ-150-LCDR 1-1/2" NEW HIGH FLOW CONTROL ZONE KIT, FOR LARGE COMMERCIAL DRIP ZONES. 1-1/2" PESB-R SCRUBBER GLOBE VALVE WITH SINGLE 1-1/2" PRESSURE REGULATING (40PSI) QUICK-CHECK BASKET FILTERS. FLOW RANGE: 15-62GPM. |
| | AREA TO RECEIVE DRIPLINE RAIN BIRD XFS-CV-09-18 NEW XFS-CV ON-SURFACE LANDSCAPE DRIPLINE WITH A HEAVY-DUTY 4.3 PSI CHECK VALVE. 0.9 GPH EMITTERS AT 18" O.C. DRIPLINE LATERALS SPACED AT 18" APART, WITH EMITTERS OFFSET FOR TRIANGULAR PATTERN. SPECIFY XF INSERT FITTINGS. |
| | RAIN BIRD 44-LRC 1" NEW 1" BRASS QUICK-COUPLING VALVE, WITH CORROSION-RESISTANT STAINLESS STEEL SPRING, LOCKING THERMOPLASTIC RUBBER COVER, AND 2-PIECE BODY. |
| M1 M2 | GRISWOLD 2000 1" EXISTING NORMALLY CLOSED MASTER VALVE - PROTECT IN PLACE. FIELD VERIFY AND TEST FOR PROPER OPERATION, REPAIR OR REPLACE IF DAMAGED. |
| BF1 BF2 | FEBCO 825YA 1" EXISTING REDUCED PRESSURE BACKFLOW PREVENTER - PROTECT IN PLACE. FIELD VERIFY AND TEST FOR PROPER OPERATION, REPAIR OR REPLACE IF DAMAGED. |
| A B | IMPERIAL TECHNICAL SERVICES ICA7AS-HP3-12/ SP/HP3SP-3/IFS-100C/SLR1-100/POLE-4-10 12 STATION SOLAR CONTROLLER ASSEMBLY BY IMPERIAL TECHNICAL SERVICES (ITS). CONTACT DARYL GREEN AT (949) 584-7311. |
| FS | IMPERIAL TECHNICAL SERVICES IFS-100C NEW 1" FLOW SENSOR AS PART OF CONTROLLER ASSEMBLY ABOVE. |
| M1 M2 | EXISTING 1" DOMESTIC WATER METER - FIELD VERIFY, PROTECT IN PLACE |
| | IRRIGATION LATERAL LINE: PVC SCHEDULE 40 |
| | IRRIGATION MAINLINE: PVC SCHEDULE 40 1 1/2" |
| | PIPE SLEEVE: PVC SCHEDULE 40 TYPICAL PIPE SLEEVE FOR IRRIGATION PIPE AND CONTROL WIRE UNDER PAVING. SEE NOTE 29 ON SHEET 25. |

VALVE CALL OUT: # / #" — VALVE SIZE
VALVE NUMBER
VALVE FLOW (GPM)
HYDROZONE NUMBER
1=LOW WATER USE PLANT W/ DRIP
2=MEDIUM WATER USE TREE W/ BUBBLER

SCALE 1"=10'

10 5 0 10 20 30
SCALE: 1"=10'

COUNTY OF ORANGE CALIFORNIA

| MARK | DESCRIPTION | DATE | APPR. |
|---|---|---|---|
| | | | |

PREPARED UNDER THE RESPONSIBLE CHARGE OF:
REGISTERED LANDSCAPE ARCHITECT JEREMY FRANZINI LIC. NO. 4514 STATE OF CALIFORNIA
02/28/22
DATE
JEREMY FRANZINI, LIC. NO. 4514

DESIGNED BY: JF
DRAWN BY: EC
CHECKED BY: BRM
DRAWING NUMBER:
FILE NAME: XXXXXXXXXXXXXXXXXXX
PLOT DATE: 02/28/2022
SCALE: AS SHOWN

County of Orange
OC Public Works

PREPARED BY:
Michael Baker INTERNATIONAL
5 Hutton Centre Drive, Suite 500, Santa Ana, CA 92707
Phone: (949) 472-3505 - MBAKERINTL.COM

LAGUNA CANYON CHANNEL REPLACEMENT
OCFCD FACILITY NO. I02

IRRIGATION PLAN - SHEET 2

SHEET
28
SHEET 28 OF 41



EXHIBIT B

H:\PDATA\180156\CADD\LARCH\DLV\180156-028-IR2.DWG CAILLE, ELISE 2/23/2022 4:18 PM

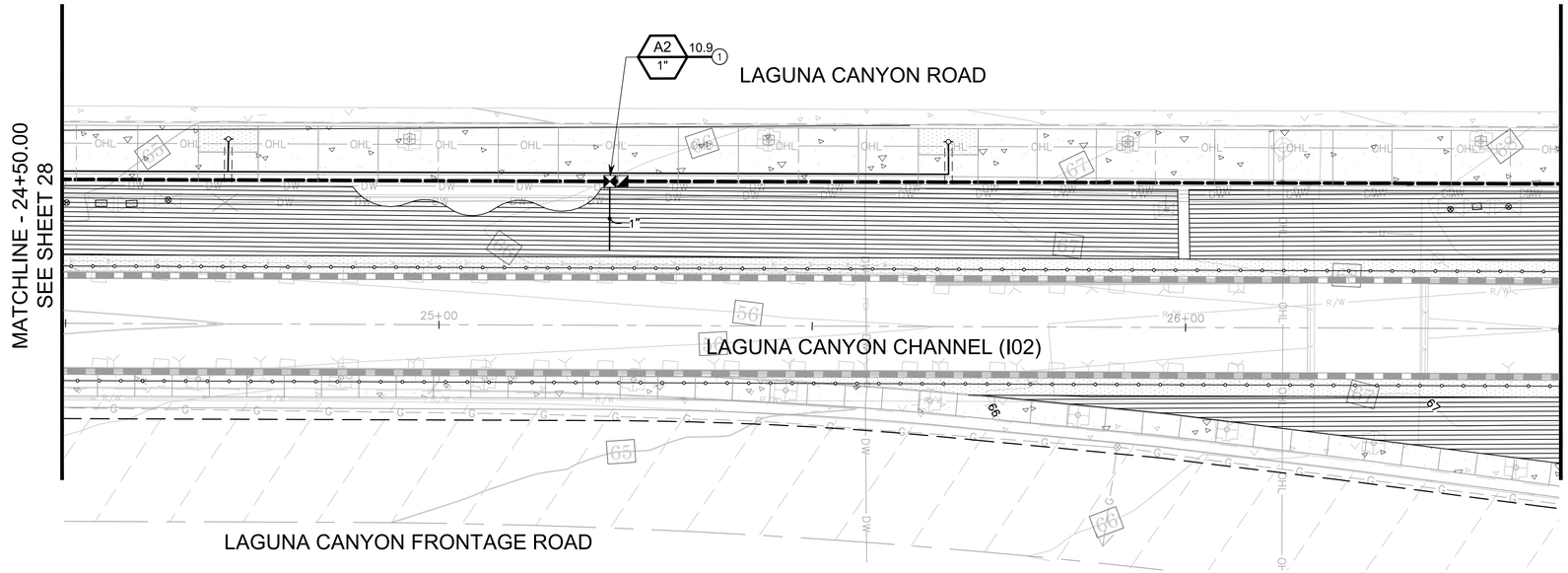


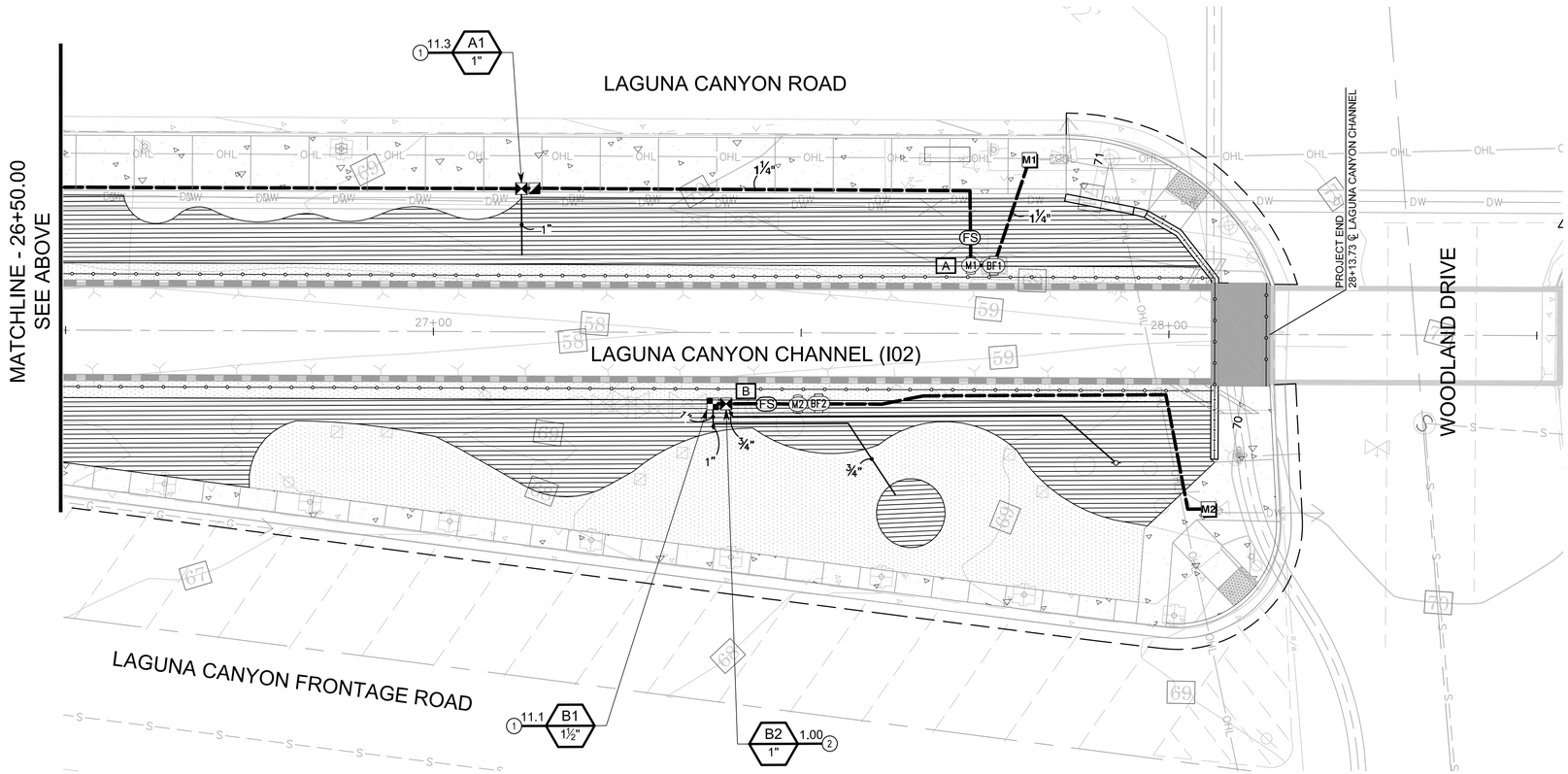


SEE SHEETS 30-32 FOR IRRIGATION NOTES AND DETAILS

## IRRIGATION LEGEND

| SYMBOL | MANUFACTURER/MODEL | ARC | PSI | GPM | RADIUS |
|---|---|---|---|---|---|
| | RAIN BIRD RWS-B-C 1402 (INSTALL 2 PER TREE) | 360 | 30 | 0.5 | 3' |

| SYMBOL | MANUFACTURER/MODEL/DESCRIPTION |
|---|---|
| | RAIN BIRD XCZ-100-PRB-COM 1"<br>NEW WIDE FLOW DRIP CONTROL KIT FOR COMMERCIAL APPLICATIONS. 1" BALL VALVE WITH 1" PESB VALVE AND 1" PRESSURE REGULATING 40PSI QUICK-CHECK BASKET FILTER. 0.3GPM TO 20GPM. |
| | RAIN BIRD XCZ-150-LCDR 1-1/2"<br>NEW HIGH FLOW CONTROL ZONE KIT, FOR LARGE COMMERCIAL DRIP ZONES. 1-1/2" PESB-R SCRUBBER GLOBE VALVE WITH SINGLE 1-1/2" PRESSURE REGULATING (40PSI) QUICK-CHECK BASKET FILTERS. FLOW RANGE: 15-62GPM. |
| | AREA TO RECEIVE DRIPLINE<br>RAIN BIRD XFS-CV-09-18<br>NEW XFS-CV ON-SURFACE LANDSCAPE DRIPLINE WITH A HEAVY-DUTY 4.3 PSI CHECK VALVE. 0.9 GPH EMITTERS AT 18" O.C. DRIPLINE LATERALS SPACED AT 18" APART, WITH EMITTERS OFFSET FOR TRIANGULAR PATTERN. SPECIFY XF INSERT FITTINGS. |
| | RAIN BIRD 44-LRC 1"<br>NEW 1" BRASS QUICK-COUPLING VALVE, WITH CORROSION-RESISTANT STAINLESS STEEL SPRING, LOCKING THERMOPLASTIC RUBBER COVER, AND 2-PIECE BODY. |
| M1 M2 | GRISWOLD 2000 1"<br>EXISTING NORMALLY CLOSED MASTER VALVE - PROTECT IN PLACE. FIELD VERIFY AND TEST FOR PROPER OPERATION, REPAIR OR REPLACE IF DAMAGED. |
| BF1 BF2 | FEBCO 825YA 1"<br>EXISTING REDUCED PRESSURE BACKFLOW PREVENTER - PROTECT IN PLACE. FIELD VERIFY AND TEST FOR PROPER OPERATION, REPAIR OR REPLACE IF DAMAGED. |
| A B | IMPERIAL TECHNICAL SERVICES ICA7AS-HP3-12/ SP/HP3SP-3/IFS-100C/SLR1-100/POLE-4-10<br>12 STATION SOLAR CONTROLLER ASSEMBLY BY IMPERIAL TECHNICAL SERVICES (ITS). CONTACT DARYL GREEN AT (949) 584-7311. |
| FS | IMPERIAL TECHNICAL SERVICES IFS-100C<br>NEW 1" FLOW SENSOR AS PART OF CONTROLLER ASSEMBLY ABOVE. |
| M1 M2 | EXISTING 1" DOMESTIC WATER METER - FIELD VERIFY, PROTECT IN PLACE |
| | IRRIGATION LATERAL LINE: PVC SCHEDULE 40 |
| | IRRIGATION MAINLINE: PVC SCHEDULE 40 1 1/2" |
| | PIPE SLEEVE: PVC SCHEDULE 40<br>TYPICAL PIPE SLEEVE FOR IRRIGATION PIPE AND CONTROL WIRE UNDER PAVING. SEE NOTE 29 ON SHEET 25. |

VALVE CALL OUT: # / #" — VALVE NUMBER; # — VALVE FLOW (GPM); # — HYDROZONE NUMBER; VALVE SIZE
1=LOW WATER USE PLANT W/ DRIP
2=MEDIUM WATER USE TREE W/ BUBBLER

SCALE 1"=10'

10 5 0 10 20 30
SCALE: 1"=10'

COUNTY OF ORANGE CALIFORNIA

| MARK | DESCRIPTION | DATE | APPR. |
|---|---|---|---|
| | | | |

PREPARED UNDER THE RESPONSIBLE CHARGE OF:
REGISTERED LANDSCAPE ARCHITECT — JEREMY FRANZINI — LIC. NO. 4514 — STATE OF CALIFORNIA
02/28/22
DATE
JEREMY FRANZINI, LIC. NO. 4514

DESIGNED BY: JF
DRAWN BY: EC
CHECKED BY: BRM
DRAWING NUMBER:
FILE NAME: XXXXXXXXXXXXXXXXXX
PLOT DATE: 02/28/2022
SCALE: AS SHOWN

County of Orange
OC Public Works

PREPARED BY:
Michael Baker INTERNATIONAL
5 Hutton Centre Drive, Suite 500, Santa Ana, CA 92707
Phone: (949) 472-3505 - MBAKERINTL.COM

LAGUNA CANYON CHANNEL REPLACEMENT
OCFCD FACILITY NO. I02

IRRIGATION PLAN - SHEET 3

SHEET
29
SHEET 29 OF 41

H:\PDATA\180156\CADD\LARCH\DLV\180156-029-IR3.DWG CAILLE, ELISE 3/8/2022 9:42 AM



EXHIBIT B

## Appendix C: Water Efficient Landscape Worksheet

### WATER EFFICIENT LANDSCAPE WORKSHEET (POC 1)

This worksheet is filled out by the project applicant and it is a required item of the Landscape Documentation Package.

**Reference Evapotranspiration (ETo)[a]:** 46.5

**Landscape Area Sector Type (select one):** [ ] Residential [X] Non-Residential

| | Hydrozone #/Planting Description | Location | Plant Factor[b] (PF) | Irrigation Method[c] | Irrigation Efficiency[c] (IE) | ETAF (PF/IE) | Landscape Area (sq-ft) | ETAF x Area | Estimated Total Water Use[d] (ETWU) |
|---|---|---|---|---|---|---|---|---|---|
| ***Regular Landscape Area*** | | | | | | | | | |
| 1 | LOW WATER USE PLANT | | 0.3 | DRIP | 0.81 | 0.37 | 12,463 | 4,616 | 133,077 |
| 2 | | | | | | | | | |
| 3 | | | | | | | | | |
| 4 | | | | | | | | | |
| 5 | | | | | | | | | |
| 6 | | | | | | | | | |
| 7 | | | | | | | | | |
| 8 | | | | | | | | | |
| 9 | | | | | | | | | |
| 10 | | | | | | | | | |
| 11 | | | | | | | | | |
| 12 | | | | | | | | | |

| *Average* | *Total* | *Total* |
|---|---|---|
| 0.37 | 12,463 | 4,616 |

**Average ETAF for Regular Landscape Areas[e] (circle one):** In Compliance / Not In Compliance

***Special Landscape Area***

| | | | | | | | |
|---|---|---|---|---|---|---|---|
| SLA-1 | | | | | | | |
| SLA-2 | | | | | | | |
| SLA-3 | | | | | | | |
| SLA-4 | | | | | | | |
| SLA-5 | | | | | | | |
| | | | | ***Totals*** | | | |

| | |
|---|---|
| **Total Landscape Area** | 12,463 |
| **Site wide ETAF** | 0.37 |
| **ETWU Total** | 133,077 |
| **Maximum Allowed Water Allowance (MAWA)[f]** | 161,689 |

25

## Appendix C: Water Efficient Landscape Worksheet

### WATER EFFICIENT LANDSCAPE WORKSHEET (POC 2)

This worksheet is filled out by the project applicant and it is a required item of the Landscape Documentation Package.

**Reference Evapotranspiration (ETo)[a]:** 46.5

**Landscape Area Sector Type (select one):** [ ] Residential [X] Non-Residential

| | Hydrozone #/Planting Description | Location | Plant Factor[b] (PF) | Irrigation Method[c] | Irrigation Efficiency[c] (IE) | ETAF (PF/IE) | Landscape Area (sq-ft) | ETAF x Area | Estimated Total Water Use[d] (ETWU) |
|---|---|---|---|---|---|---|---|---|---|
| ***Regular Landscape Area*** | | | | | | | | | |
| 1 | LOW WATER USE PLANT | | 0.3 | DRIP | 0.81 | 0.37 | 2,006 | 743 | 21,420 |
| 2 | MEDIUM WATER USE TREE | | 0.5 | BUBBLER | 0.75 | 0.67 | 50 | 33 | 961 |
| 3 | | | | | | | | | |
| 4 | | | | | | | | | |
| 5 | | | | | | | | | |
| 6 | | | | | | | | | |
| 7 | | | | | | | | | |
| 8 | | | | | | | | | |
| 9 | | | | | | | | | |
| 10 | | | | | | | | | |
| 11 | | | | | | | | | |
| 12 | | | | | | | | | |

| *Average* | *Total* | *Total* |
|---|---|---|
| 0.38 | 2,056 | 776 |

**Average ETAF for Regular Landscape Areas[e] (circle one):** In Compliance / Not In Compliance

***Special Landscape Area***

| | | | | | | | |
|---|---|---|---|---|---|---|---|
| SLA-1 | | | | | | | |
| SLA-2 | | | | | | | |
| SLA-3 | | | | | | | |
| SLA-4 | | | | | | | |
| SLA-5 | | | | | | | |
| | | | | ***Totals*** | | | |

| | |
|---|---|
| **Total Landscape Area** | 2,056 |
| **Site wide ETAF** | 0.38 |
| **ETWU Total** | 22,381 |
| **Maximum Allowed Water Allowance (MAWA)[f]** | 26,674 |

25

## Appendix B: Certification of Landscape Design

### CERTIFICATION OF LANDSCAPE DESIGN

I hereby certify that:

(1) I am a professional appropriately licensed in the State of California to provide professional landscape design services.

(2) The landscape design and water use calculations for the property located at _____ (provide street address or parcel number(s)) were prepared by me or under my supervision.

(3) The landscape design and water use calculations for the identified property comply with the requirements of the City of LAGUNA BEACH Water Efficient Landscape Ordinance (Municipal Code Sections _____) and the City of LAGUNA BEACH Guidelines for Implementation of the City of LAGUNA BEACH Water Efficient Landscape Ordinance.

(4) The information I have provided in this Certificate of Landscape Design is true and correct and is hereby submitted in compliance with the City of LAGUNA BEACH Guidelines for Implementation of the City of LAGUNA BEACH Water Efficient Landscape Ordinance.

JEREMY FRANZINI
Print Name

Date

Signature

4514
License Number

5 HUTTON CENTRE DRIVE, SUITE 500, SANTA ANA CA 92707
Address

(949)472-3415
Telephone

JFRANZINI@MBAKERINTL.COM
E-mail Address

Landscape Design Professional's Stamp
(If applicable)

REGISTERED LANDSCAPE ARCHITECT
JEREMY FRANZINI LIC. NO. 4514
SIGNATURE
JUNE 30, 2023
RENEWAL DATE
DATE
STATE OF CALIFORNIA

24

## CRITICAL ANALYSIS

| P.O.C. NUMBER: 01 | | P.O.C. NUMBER: 02 | |
|---|---|---|---|
| Water Source Information: | As-Built | Water Source Information: | As-Built |
| FLOW AVAILABLE | | FLOW AVAILABLE | |
| Water Meter Size: | 1" | Water Meter Size: | 1" |
| Flow Available: | 18.20 gpm | Flow Available: | 18.20 gpm |
| PRESSURE AVAILABLE | | PRESSURE AVAILABLE | |
| Static Pressure at POC: | 65.00 PSI | Static Pressure at POC: | 65.00 PSI |
| Elevation Change: | 5.00 ft | Elevation Change: | 5.00 ft |
| Service Line Size: | 1" | Service Line Size: | 1" |
| Length of Service Line: | 20 ft | Length of Service Line: | 20 ft |
| Pressure Available: | 61.00 psi | Pressure Available: | 61.00 psi |
| DESIGN ANALYSIS | | DESIGN ANALYSIS | |
| Maximum Station Flow: | 14.64 gpm | Maximum Station Flow: | 15.72 gpm |
| Flow Available at POC: | 18.20 gpm | Flow Available at POC: | 18.20 gpm |
| Residual Flow Available: | 3.56 gpm | Residual Flow Available: | 2.48 gpm |
| Critical Station: | A3 | Critical Station: | B1 |
| Design Pressure: | 30.00 psi | Design Pressure: | 30.00 psi |
| Friction Loss: | 0.15 psi | Friction Loss: | 0.05 psi |
| Fittings Loss: | 0.02 psi | Fittings Loss: | 0.00 psi |
| Elevation Loss: | 0.00 psi | Elevation Loss: | 0.00 psi |
| Loss through Valve: | 12.11 psi | Loss through Valve: | 2.00 psi |
| Pressure Req. at Critical Station: | 42.28 psi | Pressure Req. at Critical Station: | 32.06 psi |
| Loss for Fittings: | 0.29 psi | Loss for Fittings: | 0.06 psi |
| Loss for Main Line: | 2.93 psi | Loss for Main Line: | 0.58 psi |
| Loss for POC to Valve Elevation: | 0.00 psi | Loss for POC to Valve Elevation: | 0.00 psi |
| Loss for Backflow: | 10.82 psi | Loss for Backflow: | 10.84 psi |
| Loss for Master Valve: | 1.20 psi | Loss for Master Valve: | 1.38 psi |
| Loss for Water Meter: | 1.12 psi | Loss for Water Meter: | 1.34 psi |
| Critical Station Pressure at POC: | 58.64 psi | Critical Station Pressure at POC: | 46.26 psi |
| Pressure Available: | 61.00 psi | Pressure Available: | 61.00 psi |
| Residual Pressure Available: | 2.36 psi | Residual Pressure Available: | 14.74 psi |

## IRRIGATION NOTES

1. ALL IRRIGATION WORK SHALL CONFORM TO CITY OF LAGUNA BEACH LANDSCAPE IRRIGATION CODE (WATER EFFICIENT LANDSCAPE ORDINANCE) AND THE LATEST EDITION OF THE STANDARD SPECIFICATIONS FOR PUBLIC WORKS CONSTRUCTION "GREENBOOK" (A COPY SHALL BE KEPT ON THE JOB SITE AT ALL TIMES). ALL WORK SHALL BE SUBJECT TO THE CITY INSPECTOR'S ACCEPTANCE AS A CONDITION OF COMPLETION OF WORK BY THE CONTRACTOR.
2. INSTALL ALL IRRIGATION EQUIPMENT PER ALL APPLICABLE LOCAL CODES AND ORDINANCES.
3. CONTRACTOR SHALL MEET WITH THE CITY MAINTENANCE REPRESENTATIVE AT THE PROJECT SITE TO LOCATE EXISTING IRRIGATION WATER METERS, VALVES, MAINLINE, AND ALL OTHER PERTINENT SITE INFORMATION.
4. PRIOR TO DEMOLITION AND INSTALLATION OF NEW IMPROVEMENTS, CONTRACTOR SHALL IDENTIFY ITEMS TO BE REMOVED AND/OR RELOCATED. CONTRACTOR IS RESPONSIBLE FOR MAINTAINING IRRIGATION WATER TO EXISTING LANDSCAPE AREAS ADJOINING THE LIMIT OF WORK AND AREAS AFFECTED BY THE NEW IMPROVEMENTS. THE CONTRACTOR SHALL BARE ALL COSTS ASSOCIATED WITH LACK OF IRRIGATION WATER.
5. CONTRACTOR SHALL BE PRESENT DURING GRADING OPERATIONS TO PERFORM NECESSARY SERVICES AND PROVIDE ALL EQUIPMENT NECESSARY FOR CAPPING THE EXISTING SYSTEM AND MAKING NECESSARY ADJUSTMENTS TO EXISTING SYSTEMS TO ENSURE SYSTEMS REMAIN OPERATIONAL TO THOSE AREAS LOCATED OUTSIDE THE LIMIT OF WORK DEPICTED ON THESE PLANS.
6. IRRIGATION PLANS ARE DESIGNED AS DIAGRAMMATIC AND APPROXIMATE. PIPING, VALVES, ETC. SHOWN WITHIN PAVED AREAS ARE FOR DESIGN CLARIFICATION ONLY AND SHALL BE INSTALLED IN PLANTING AREAS WHERE POSSIBLE. VALVE BOXES ARE TO BE INSTALLED IN LANDSCAPED AREA ONLY.
7. CHECK VALVES SHALL BE USED WHERE NECESSARY TO PREVENT WATER FLOW FROM LOWER ELEVATION SPRINKLER HEADS WHEN SYSTEM IS TURNED OFF.
8. DO NOT WILLFULLY INSTALL THE IRRIGATION SYSTEM AS SHOWN ON THE DRAWINGS WHEN IT IS OBVIOUS IN THE FIELD THAT OBSTRUCTIONS, GRADE DIFFERENCES OR DIFFERENCES IN THE AREA DIMENSIONS EXIST THAT MIGHT NOT HAVE BEEN CONSIDERED IN THE ENGINEERING. SUCH OBSTRUCTIONS OR DIFFERENCES SHOULD BE BROUGHT TO THE ATTENTION OF CITY REPRESENTATIVE. IN THE EVENT THIS NOTIFICATION IS NOT PERFORMED, THE CONTRACTOR SHALL ASSUME FULL RESPONSIBILITY FOR ANY REVISIONS NECESSARY AT NO EXPENSE TO THE CITY.
9. SPLICING OF 24 VOLT WIRES WILL NOT BE PERMITTED EXCEPT IN VALVE BOXES. LEAVE A 24" COIL OF EXCESS WIRE AT EACH SPLICE. LABEL ALL WIRES W/WATERPROOF MARKERS AT ALL SPLICES, VALVE MANIFOLDS AND CONTROLLER.
10. INSTALL VALVE BOXES 12" FROM AND PERPENDICULAR TO WALKS, CURB, LAWN, BUILDINGS OR LANDSCAPE FEATURES. AT MULTIPLE VALVE BOX GROUPS, EACH BOX SHALL BE AN EQUAL DISTANCE FROM THE WALK, CURB, LAWN, ETC. AND EACH BOX SHALL BE 6" APART. SHORT SIDE OF THE VALVE BOX SHALL BE PARALLEL TO WALK, CURB, LAWN ETC. INSTALL ONE VALVE PER BOX ONLY.
11. CONTRACTOR IS RESPONSIBLE FOR BACKFLOW UNIT TO BE TESTED AND CERTIFIED BY AN APPROVED TESTER.
12. CONTRACTOR SHALL BE RESPONSIBLE FOR THE INSTALLATION OF ALL MATERIAL APPEARING ON PLAN.
13. ALL MAIN LINE PIPES SHALL BE PRESSURE TESTED PER STANDARD IRRIGATION SPECIFICATIONS WITH THE VALVES INSTALLED. THE CONTRACTOR SHALL PROVIDE ALL EQUIPMENT NEEDED. IF ANY LEAKS DEVELOP, THE REPAIRS ARE TO BE MADE AND TEST REPEATED UNTIL THE SYSTEM IS PROVEN WATERTIGHT. THE CONTRACTOR IS TO CENTER LOAD THE PIPE AND LEAVE ALL JOINTS EXPOSED FOR INSPECTION. THE PRESSURE TEST SHALL BE OBSERVED AND APPROVED BY THE INSPECTOR. WHEN THE PIPE IS PROVEN WATERTIGHT AND ONLY THEN MAY THE LINE BE BACK-FILLED.
14. THE CONTRACTOR SHALL PROVIDE AND KEEP AN UP-TO-DATE "RECORD DRAWING" SHOWING ALL CHANGES TO THE ORIGINAL DRAWINGS AND EXACT LOCATIONS OF FACILITIES INSTALLED. BEFORE FINAL INSPECTION, THE CONTRACTOR SHALL FURNISH "RECORD DRAWINGS" TO THE PROJECT INSPECTOR.
15. A DIAGRAM OF THE IRRIGATION PLAN SHOWING HYDROZONES SHALL BE KEPT WITH THE IRRIGATION CONTROLLER FOR SUBSEQUENT MANAGEMENT PURPOSES. THE CONTRACTOR SHALL PROVIDE TWO CONTROLLER CHART FOR EACH CONTROLLER INSTALLED. THE CHART SHALL SHOW THE AREA IRRIGATED BY THE CONTROLLER AND SHALL BE THE MAXIMUM SIZE THE ENCLOSURE DOOR WILL ALLOW. THE CHART MAY BE REDUCED DRAWING OF THE RECORD DRAWINGS. THE CHART SHALL BE DIGITALLY COLORED WITH THE DIFFERENT COLOR FOR EACH STATION. THE CHART SHALL BE LAMINATED.
16. THE CONTRACTOR SHALL PROVIDE TWO (2) INDIVIDUALLY BOUND SETS OF OPERATION AND MAINTENANCE MANUALS FOR CONTROLLER REMOTE CONTROL VALVES, SHUT OFF VALVES, QUICK COUPLER VALVES, AND ALL OTHER MECHANICAL DEVICES WITH MOVING PARTS USED IN THIS CONTRACT. PRESENT IN HARDBACK THREE RING BINDERS.
17. CONTRACTOR SHALL PROVIDE ALL MATERIALS, LABOR AND EQUIPMENT NECESSARY TO ENSURE FULLY OPERATION IRRIGATION SYSTEMS AS DETERMINED BY THE CITY INSPECTOR.
18. AN IRRIGATION AUDIT REPORT SHALL BE COMPLETED AT THE TIME OF FINAL INSPECTION. CONTRACTOR WILL BE REQUIRED TO HIRE A THIRD PARTY CERTIFIED LANDSCAPE IRRIGATION AUDITOR TO PROVIDE AN AUDIT REPORT TO THE CITY ON THE NEW IRRIGATION SYSTEM IN CONFORMANCE WITH AB 1881 REQUIREMENTS. CONTRACTOR WILL ALSO BE RESPONSIBLE TO MAKE ANY RECOMMENDED REPAIR OR CORRECTIONS THAT RESULT FROM THE IRRIGATION AUDIT REPORT AT NO COST TO THE CITY.
19. CONTRACTOR SHALL NOT INSTALL ANY PLANTING UNTIL THE FOLLOWING IS COMPLETED:
    A. THE IRRIGATION SYSTEM SHALL BE FULLY OPERATIONAL.
    B. HYDROSTATIC PRESSURE TESTS SHALL BE PERFORMED AND PASSED ON ALL MAIN AND LATERAL LINES.
    C. ALL ZONES SHALL PASS A COVERAGE TEST IN PRESENCE OF CITY STAFF.
    D. CONTROLLERS SHALL BE FULLY OPERATIONAL.
22. IRRIGATION CONTRACTOR SHALL GUARANTEE THE ENTIRE IRRIGATION SYSTEM TO BE FREE OF DEFECTS IN WORKMANSHIP AND MATERIALS FOR A PERIOD OF ONE (1) YEAR FROM FINAL ACCEPTANCE BY THE CITY.
23. THE CONTRACTOR SHALL KEEP THE PREMISES CLEAN AND FREE OF EXCESS EQUIPMENT, MATERIALS AND RUBBISH INCIDENTAL TO HIS WORK.
24. A CERTIFICATE OF COMPLETION SHALL BE FILLED OUT AND CERTIFIED BY EITHER THE DESIGNER OF THE LANDSCAPE PLANS, IRRIGATION PLANS, OR LICENSED LANDSCAPE CONTRACTOR FOR THE PROJECT.
25. ALL FITTINGS (PVC) ON CONSTANT PRESSURE MAINLINE SHALL BE SCH80 PVC.
26. INSTALL AIR RELIEF VALVE AT THE ENDS OF ALL MAINLINES BALL TYPE SHUTOFF VALVE, PRIOR, FOR ISOLATION DURING REPAIRS, ETC.
27. THE CONTRACTOR SHALL VERIFY THE EXACT LOCATIONS OF ALL EXISTING UTILITIES, SITE CONDITIONS, STRUCTURES, PROPERTY LINES, AND SERVICES BEFORE COMMENCING WORK TO ENSURE THAT THERE IS NO DAMAGE DURING CONSTRUCTION. THE LOCATIONS OF THESE CONDITIONS SHOWN IN THESE PLANS ARE APPROXIMATE ONLY. ANY DISCREPANCIES BETWEEN THESE PLANS AND ACTUAL FIELD CONDITIONS SHALL BE REPORTED TO THE CITY RESIDENT ENGINEER. THE CONTRACTOR IS RESPONSIBLE TO REPAIR AND REPLACE ANY DAMAGE TO EXISTING UTILITIES DURING CONSTRUCTION WITH NO ADDITIONAL COST TO THE OWNER.
28. STATE IRRIGATION FACILITIES DAMAGED DURING AND WITHIN THIS PROJECT SHALL BE RESTORED AND/OR RECONSTRUCTED PER CALTRANS STANDARDS.
29. PIPE SLEEVE SIZE SHALL ALLOW FOR IRRIGATION PIPING & THEIR RELATED COUPLINGS TO EASILY SLIDE THROUGH SLEEVE MATERIAL. EXTEND SLEEVES 18" BEYOND EDGES OF PAVING OR CONSTRUCTION. INSTALL SLEEVE FOR ALL NEW IRRIGATION PIPE AND NEW CONTROL WIRE UNDER PAVING WHETHER SYMBOL IS SHOWN OR NOT SHOWN ON THE PLAN. CONTRACTOR TO COORDINATE INSTALLATION OF IRRIGATION SLEEVES AT THE NEW BRIDGE WITH STRUCTURAL PLANS AND GENERAL CONTRACTOR.
30. SEE THE SPECIFICATIONS FOR ADDITIONAL REQUIREMENTS.

COUNTY OF ORANGE CALIFORNIA

| MARK | DESCRIPTION | DATE | APPR. |
|---|---|---|---|
| | | | |

PREPARED UNDER THE RESPONSIBLE CHARGE OF:
REGISTERED LANDSCAPE ARCHITECT JEREMY FRANZINI LIC. NO. 4514 STATE OF CALIFORNIA
JUNE 30, 2023 RENEWAL DATE
02/28/22 DATE
JEREMY FRANZINI, LIC. NO. 4514

DESIGNED BY: JF
DRAWN BY: EC
CHECKED BY: BRM
DRAWING NUMBER:
FILE NAME: XXXXXXXXXXXXXXXXXX
PLOT DATE: 02/28/2022
SCALE: AS SHOWN

County of Orange OC Public Works

PREPARED BY: Michael Baker INTERNATIONAL
5 Hutton Centre Drive, Suite 500, Santa Ana, CA 92707
Phone: (949) 472-3505 - MBAKERINTL.COM

LAGUNA CANYON CHANNEL REPLACEMENT
OCFCD FACILITY NO. I02

IRRIGATION NOTES

SHEET 30
SHEET 30 OF 41



EXHIBIT B

H:\PDATA\180156\CADD\LARCH\DLV\180156-030-I01.DWG CAILLE, ELISE 2/23/2022 4:21 PM

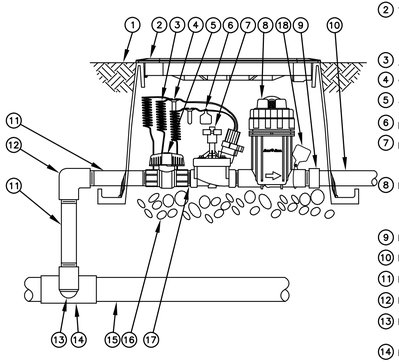

1. FINISH GRADE/TOP OF MULCH
2. VALVE BOX W/ GREEN COVER: RAIN BIRD VB–JUMBO WITH HEAT BRAND "RCV" AND CONTROL STATION # ONTO LID.
3. 30–INCH LINEAR LENGTH OF WIRE, COILED
4. WATERPROOF CONNECTION: RAIN BIRD DB SERIES
5. 1–INCH BALL VALVE (INCLUDED IN XCZ–PRB–100–COM KIT)
6. ID TAG
7. REMOTE CONTROL VALVE: RAIN BIRD PESB–R–PRS–D WITH PRESSURE REGULATING MODULE
8. PRESSURE REGULATING QUICK CHECK BASKET FILTER: RAIN BIRD PRB–QKCHK–100 (INCLUDED IN XCZ–PRB–100–COM KIT)
9. PVC SCH 40 FEMALE ADAPTOR
10. LATERAL PIPE
11. PVC SCH 80 NIPPLE (LENGTH AS REQUIRED)
12. PVC SCH 80 ELL
13. PVC SCH 80 NIPPLE (2–INCH LENGTH, HIDDEN) AND PVC SCH 80 ELL
14. PVC SCH 80 TEE OR ELL
15. MAINLINE PIPE
16. 3–INCH MINIMUM DEPTH OF 3/4–INCH WASHED GRAVEL
17. PVC SCH 80 NIPPLE, CLOSE
18. T. CHRISTY WARNING TAG.

## A DRIP VALVE ASSEMBLY N.T.S.

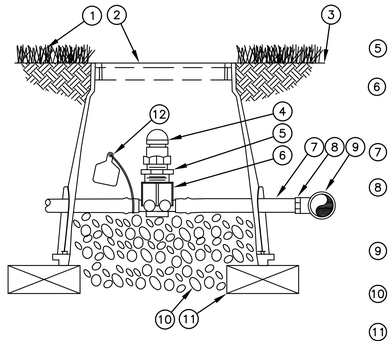

1. TURF GRASS
2. SUBTERRANEAN EMITTER BOX: RAIN BIRD SEB 7XB (GREEN COLOR) HEAT BRAND "ARV" AND CONTROL STATION # ONTO LID.
3. FINISH GRADE
4. 3/4" AIR RELIEF VALVE: PER LEGEND, TO BE INSTALLED AT HIGH POINTS IN DRIP ZONE
5. ½" X ¾" PVC REDUCER BUSHING
6. BARB X FEMALE THREAD CONNECTOR: RAIN BIRD XFD–TFA FITTING
7. ½" BLANK DRIPLINE TUBING: RAIN BIRD XF SERIES
8. BARB X MALE THREAD CONNECTOR: RAIN BIRD XFD–MA FITTING
9. PVC TEE CONNECTED TO PVC HEADER PIPE
10. 3" MINIMUM DEPTH OF ¾" WASHED GRAVEL
11. BRICK (1 OF 2)
12. CHRISTY'S WARNING TAG

## B AIR RELIEF VALVE N.T.S.

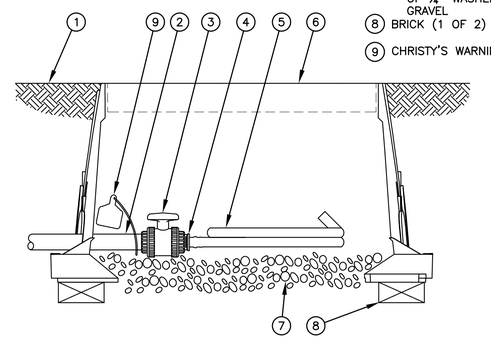

1. FINISH GRADE
2. PVC DRIP MANIFOLD PIPE
3. PVC 1" X ¾" TRUE UNION BALL VALVE
4. EASY FIT MALE X BARB ADAPTER: RAIN BIRD XFF–MA–075
5. SUB–SURFACE DRIPLINE: RAIN BIRD XF SERIES BLANK TUBING (18")
6. 12–INCH VALVE BOX WITH TAN COVER: RAIN BIRD VB–STD
7. 3–INCH MINIMUM DEPTH OF ¾" WASHED GRAVEL
8. BRICK (1 OF 2)
9. CHRISTY'S WARNING TAG

## C FLUSH POINT WITH BALL VALVE N.T.S.

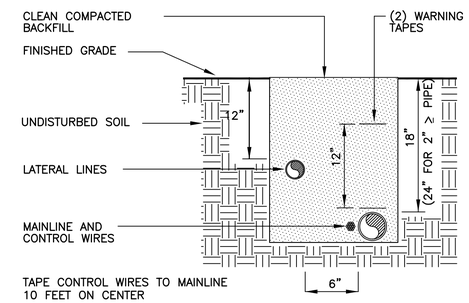


TAPE CONTROL WIRES TO MAINLINE 10 FEET ON CENTER

DEPTHS SHOWN ARE FOR IN GROUND INSTALLATIONS. ON STRUCTURE INSTALL PIPING AT DEPTH SHOWN OR AT CONCRETE SLAB DEPTH.

## D PIPE INSTALLATION N.T.S.

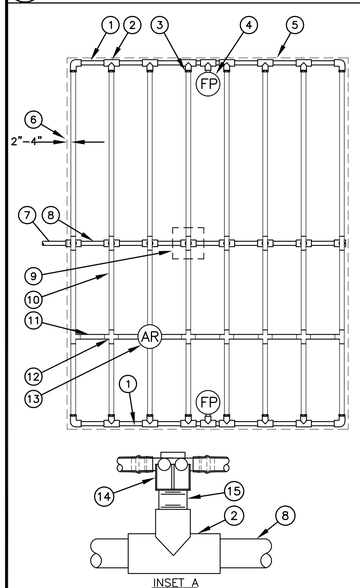


1. PVC EXHAUST HEADER
2. PVC SCH 40 TEE OR EL (TYPICAL)
3. BARB X MALE FITTING: RAIN BIRD XFD–MA FITTING (TYPICAL)
4. FLUSH POINT (TYPICAL) SEE RAIN BIRD DETAIL "XFS FLUSH POINT" OR "XFS FLUSH POINT WITH BALL VALVE"
5. PERIMETER OF AREA
6. PERIMETER DRIPLINE PIPE TO BE INSTALLED 2"–4" FROM PERIMETER OF AREA
7. PVC SUPPLY PIPE FROM RAIN BIRD CONTROL ZONE KIT (SIZED TO MEET LATERAL FLOW DEMAND)
8. PVC SUPPLY MANIFOLD
9. CONNECTION FROM SUPPLY MANIFOLD TO DRIPLINE (TYPICAL)– SEE INSET A
10. SUB–SURFACE DRIPLINE: RAIN BIRD XF SERIES DRIPLINE (TYPICAL) POTABLE: XFS DRIPLINE NON–POTABLE: XFSP DRIPLINE
11. ½" POLYETHYLENE BLANK TUBING: RAIN BIRD XF SERIES BLANK TUBING
12. BARB X BARB INSERT TEE OR CROSS: RAIN BIRD XFD–TEE OR RAIN BIRD XFD–CROSS (TYPICAL)
13. AIR RELIEF VALVE: RAIN BIRD AR VALVE KIT SEE RAIN BIRD DETAIL "XFS AIR RELIEF VALVE KIT" OR "XFS AIR RELIEF VALVE KIT IN PVC HEADER"
14. BARB X FEMALE FITTING: RAIN BIRD XFD–TFA–075 FITTING
15. ¾" PVC NIPPLE, LENGTH AS NECESSARY

NOTES:
1. DISTANCE BETWEEN LATERAL ROWS AND EMITTER SPACING TO BE BASED ON SOIL TYPE, PLANT MATERIALS AND CHANGES IN ELEVATION. SEE RAIN BIRD XF–SDI DRIPLINE INSTALLATION GUIDE FOR SUGGESTED SPACINGS.
2. LENGTH OF LONGEST DRIPLINE LATERAL SHOULD NOT EXCEED THE MAXIMUM LENGTH SHOWN IN THE TABLE SHOWN ON DETAIL F.
3. AIR RELIEF VALVE TO BE INSTALLED AT HIGH POINT OF AREA.

## E XFS SUB–SURFACE DRIPLINE N.T.S.

**XFCV Dripline Maximum Lateral Lengths (Feet)**

| Inlet Pressure psi | 12" Spacing | | 18" Spacing | |
|---|---|---|---|---|
| | Nominal Flow (gph) | | Nominal Flow (gph) | |
| | **0.6** | **0.9** | **0.6** | **0.9** |
| 20 | 192 | 136 | 254 | 215 |
| 30 | 289 | 205 | 402 | 337 |
| 40 | 350 | 248 | 498 | 416 |
| 50 | 397 | 281 | 573 | 477 |
| 60 | 436 | 309 | 637 | 529 |

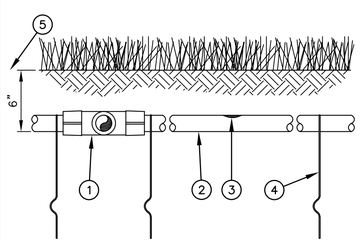


1. EASY FIT COMPRESSION TEE: RAIN BIRD MDCFTEE
2. SUB–SURFACE DRIPLINE: RAIN BIRD XF SERIES DRIPLINE POTABLE: XFS DRIPLINE NON–POTABLE: XFSP DRIPLINE
3. INLINE DRIP EMITTER
4. TIE DOWN STAKE: RAIN BIRD TDS–050 WITH BEND (TYPICAL) SEE NOTES BELOW FOR SPACING
5. TURF/FINISH GRADE OR SHRUB BED WITH MULCH

NOTES:
1. PLACE TIE DOWN STAKES EVERY THREE FEET IN SAND, FOUR FEET IN LOAM, AND FIVE FEET IN CLAY.
2. AT FITTINGS WHERE THERE IS A CHANGE OF DIRECTION SUCH AS TEES OR ELBOWS, USE TIE–DOWN STAKES ON EACH LEG OF THE CHANGE OF DIRECTION.
3. INSERTION PLOW AND TRENCHED INSTALLATIONS DO NOT REQUIRE TIE DOWN STAKES.

## F XFS SUB–SURFACE DRIPLINE BURIAL N.T.S.

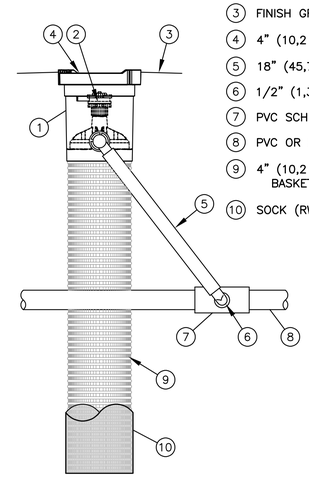

1. ROOT WATERING SYSTEM: RAIN BIRD RWS–B–X–1401 (INCLUDES RETAINER, 36" TUBE, 0.25 GPM BUBBLER, 4" GRATE, 18" OPEN SWING ASSEMBLY WITH 1/2" M NPT INLET)
2. BUBBLER: RAIN BIRD 1401 0.25 GPM (INCLUDED)
3. FINISH GRADE/TOP OF MULCH
4. 4" (10,2 CM) LOCKING GRATE (INCLUDED)
5. 18" (45,7 CM) SWING ASSEMBLY (INCLUDED)
6. 1/2" (1,3 CM) MALE NPT INLET (INCLUDED)
7. PVC SCH 40 TEE OR EL
8. PVC OR POLYETHYLENE LATERAL PIPE
9. 4" (10,2 CM) WIDE X 36" (91,4 CM) LONG RIGID BASKET WEAVE CANISTER (INCLUDED)
10. SOCK (RWS–SOCK) FOR SANDY SOILS

NOTES:
1. INSTALL PRODUCT SO THAT THE GRATE IS EVEN WITH FINISH GRADE OR TOP OF MULCH.
2. SAND SOCK (RWS–SOCK) IS 34" IN LENGTH TO COVER MESH BASKET AREA.
3. ONCE RWS HAS BEEN INSTALLED FILL THE BASKET WITH PEA GRAVEL BEFORE LOCKING LID.

## G ROOT WATERING SYSTEM N.T.S

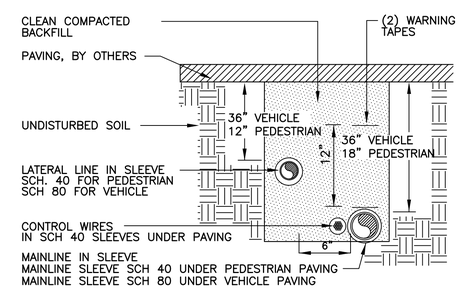


## H SLEEVE INSTALLATION N.T.S

| MARK | DESCRIPTION | DATE | APPR. |
|---|---|---|---|
| | | | |

PREPARED UNDER THE RESPONSIBLE CHARGE OF:
JEREMY FRANZINI, LIC. NO. 4514 — 02/28/22 DATE

DESIGNED BY: JF
DRAWN BY: EC
CHECKED BY: BRM
DRAWING NUMBER:
FILE NAME: XXXXXXXXXXXXXXXXXXXX
PLOT DATE: 02/28/2022
SCALE: AS SHOWN

County of Orange — OC Public Works
PREPARED BY: Michael Baker INTERNATIONAL
5 Hutton Centre Drive, Suite 500, Santa Ana, CA 92707
Phone: (949) 472-3505 / MBAKERINTL.COM

LAGUNA CANYON CHANNEL REPLACEMENT
OCFCD FACILITY NO. I02

IRRIGATION DETAILS - SHEET 1

SHEET 31 OF 41

H:\PDATA\180156\CADD\LARCH\DLV\180156-031-I02.DWG CAILLE, ELISE 2/23/2022 4:25 PM



EXHIBIT B

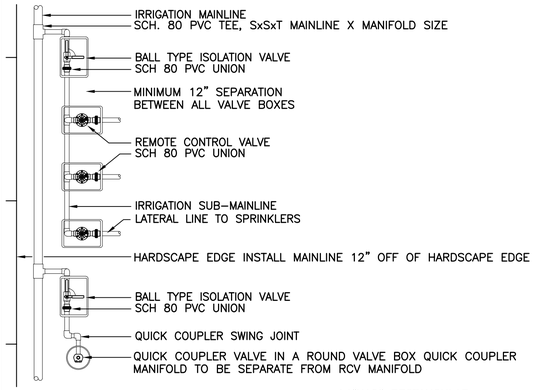


RCV MANIFOLD

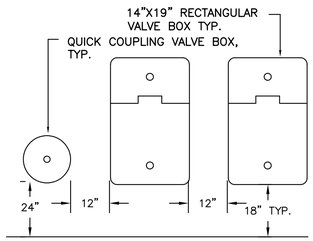


VALVE GROUPING

NOTES:
1. CENTER VALVE BOX OVER REMOTE CONTROL VALVE TO FACILITATE SERVICING VALVE.
2. SET RCV AND VALVE BOX ASSEMBLY IN GROUND-COVER/SHRUB AREA WHERE POSSIBLE.
3. SET BOXES PARALLEL TO EACH OTHER AND PERPENDICULAR TO EDGE.
4. AVOID HEAVILY COMPACTING SOIL AROUND VALVE BOXES TO PREVENT COLLAPSE AND DEFORMATION OF VALVE BOXES.

## (A) RCV MANIFOLD/VALVE GROUPING N.T.S.

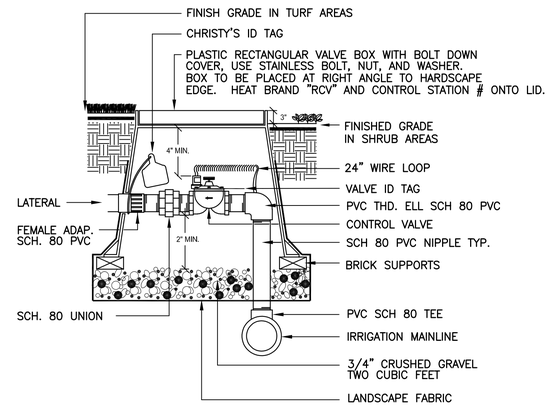


SECTION VIEW – N.T.S.

NOTE:
1. INSTALL ALL REMOTE CONTROL VALVES WITH ISOLATION VALVE, SEE DETAIL A FOR MANIFOLD AND VALVE GROUPING

## (B) REMOTE CONTROL VALVE N.T.S.

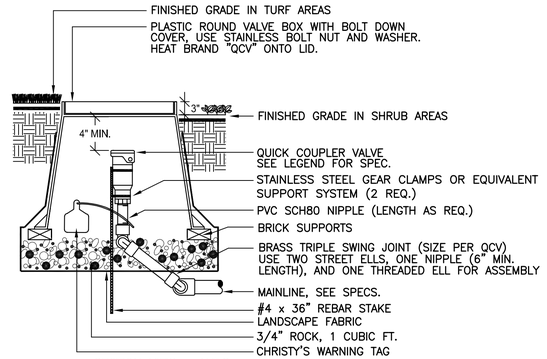


SECTION VIEW – N.T.S.

NOTES:
1. USE TEFLON TAPE ON ALL THREADED FITTINGS TYPICAL.
2. INSTALL ALL QUICK COUPLERS WITH ISOLATION VALVE, SEE DETAIL A FOR MANIFOLD AND VALVE GROUPING

## (C) QUICK COUPLER VALVE N.T.S.

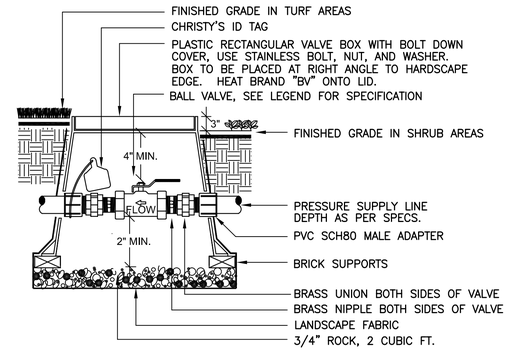


SECTION VIEW – N.T.S.

NOTES:
1. BOX TO BE INSTALLED AS TO ALLOW FOR PROPER OPERATION OF BALL VALVE.
2. INSTALL AT RIGHT ANGLE TO HARDSCAPE EDGE, INSTALL VALVE OFF-CENTER IN BOX.
3. INSTALL VALVE BOX EXTENSIONS AS REQUIRED TO ACHIEVE PROPER VALVE INSTALLATION AT MAIN LINE DEPTH.

## (D) BALL VALVE N.T.S.

1. LEAD WIRES.
2. 3M DBY SPLICE INSULATOR TUBE.
3. SCOTCHLOK ELECTRICAL CONNECTOR.
4. LOCKING FINGERS.
5. INSULATOR TUBE COVER.

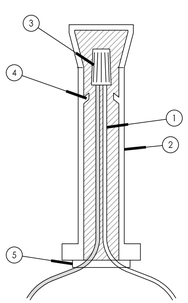


NOTES:
1. PLACE WIRES INSIDE SCOTCHLOK CONNECTOR AND TWIST.
2. INSERT WIRES WITH CONNECTOR INSIDE GEL-FILLED INSULATER TUBE, PAST LOCKING FINGERS.
3. POSITION WIRES IN WIRE CHANNELS AND SNAP COVER CLOSED.

## (E) WIRE CONNECTION N.T.S.

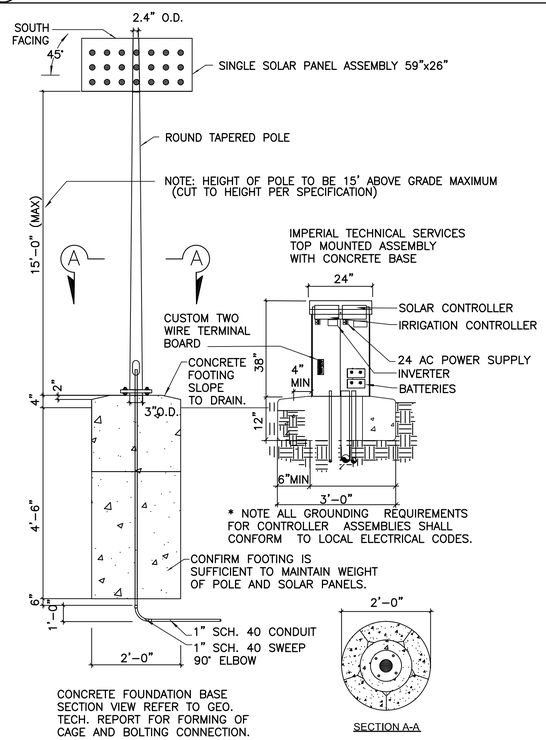


SECTION A-A

## (F) SOLAR CONTROLLER ASSEMBLY N.T.S.

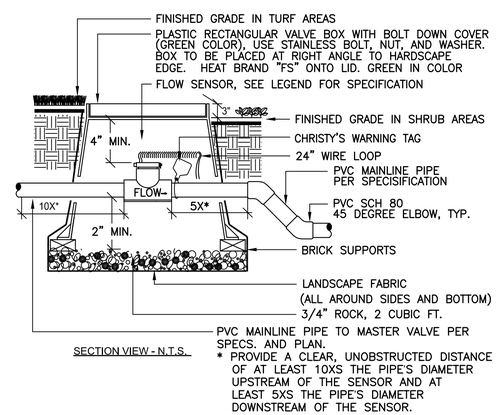


SECTION VIEW - N.T.S.

* PROVIDE A CLEAR, UNOBSTRUCTED DISTANCE OF AT LEAST 10XS THE PIPE'S DIAMETER UPSTREAM OF THE SENSOR AND AT LEAST 5XS THE PIPE'S DIAMETER DOWNSTREAM OF THE SENSOR.

NOTES:
1. INSTALL FLOW SENSOR AS PER THE MANUFACTURER'S RECOMMENDATIONS, WIRE TO IRRIGATION CONTROLLER.
2. USE 45 DEGREE ELLS TO ACHIEVE MAINLINE DEPTH ON THE DOWN-STREAM SIDE OF THE FLOW SENSOR.
3. ALL FITTINGS (PVC) ON CONSTANT PRESSURE MAINLINE SHALL BE SCH80 PVC.

## (G) FLOW METER N.T.S.

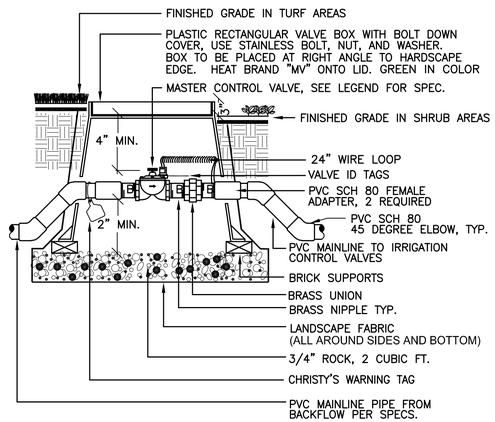


NOTE:
1. USE 45 DEGREE ELLS TO ACHIEVE MAINLINE DEPTH FROM UP-STREAM SIDE OF THE MASTER VALVE ASSEMBLY.
2. ALL FITTINGS (PVC) ON CONSTANT PRESSURE MAINLINE SHALL BE SCH80 PVC.

## (H) MASTER CONTROL VALVE N.T.S.

COUNTY OF ORANGE CALIFORNIA

| MARK | DESCRIPTION | DATE | APPR. |
|---|---|---|---|
| | | | |

PREPARED UNDER THE RESPONSIBLE CHARGE OF:
REGISTERED LANDSCAPE ARCHITECT JEREMY FRANZINI LIC. NO. 4514 STATE OF CALIFORNIA
02/28/22
DATE
JEREMY FRANZINI, LIC. NO. 4514

DESIGNED BY: JF
DRAWN BY: EC
CHECKED BY: BRM
DRAWING NUMBER:
FILE NAME: XXXXXXXXXXXXXXXXXXX
PLOT DATE: 02/28/2022
SCALE: AS SHOWN

County of Orange
OC Public Works
PREPARED BY:
Michael Baker INTERNATIONAL
5 Hutton Centre Drive, Suite 500, Santa Ana, CA 92707
Phone: (949) 472-3505 / MBAKERINTL.COM

LAGUNA CANYON CHANNEL
REPLACEMENT
OCFCD FACILITY NO. I02

IRRIGATION DETAILS - SHEET 2

SHEET
32
SHEET 32 OF 41

H:\PDATA\180156\CADD\LARCH\DLV\180156-032-ID3.DWG CAILLE, ELISE 2/23/2022 4:26 PM



EXHIBIT B

## SIGNING AND STRIPING GENERAL NOTES

1. CONTRACTOR SHALL INSTALL SIGNING AND STRIPING IN ACCORDANCE WITH THE APPROVED PLAN.
2. TRAFFIC STRIPES, PAVEMENT MARKINGS, AND RAISED PAVEMENT MARKERS SHALL BE MANUFACTURED AND INSTALLED PER CALTRANS PUBLICATION CA-MUTCD LATEST REVISION, CALTRANS STANDARD PLANS AND CALTRANS STANDARD SPECIFICATIONS, LATEST EDITIONS ADOPTED BY THE ORANGE COUNTY BOARD OF SUPERVISORS.
3. ALL STRIPES, SIGNS, AND PAVEMENT MARKINGS SHALL BE REFLECTORIZED.
4. ALL STRIPING AND MARKINGS DETAILS SHALL MATCH CALTRANS STANDARD PLAN DETAILS.
5. ALL CONFLICTING STRIPES AND PAVEMENT MARKINGS SHALL BE REMOVED BY SANDBLASTING. CONFLICTING SIGNS AND RAISED PAVEMENT MARKERS SHALL BE REMOVED. ALL REMOVALS OF SIGNS AND MARKINGS SHALL BE THE RESPONSIBILITY OF THE DEVELOPER OR APPLICANT.
6. NEW APPLICATIONS OF PAINT SHALL BE APPLIED IN TWO (2) EQUAL THICKNESS TOTALING THE MINIMUM WET THICKNESS INDICATED IN STANDARD SPECIFICATION SECTION 310-5.6.5, "TRAFFIC STRIPES AND MARKINGS", AND SHALL INCLUDE 50% OF THE REQUIRED BEADS WITH EACH APPLICATION WHEN APPLIED, PAINT SHALL HAVE A MINIMUM SEVEN DAY PERIOD BETWEEN APPLICATIONS UNLESS OTHERWISE BY THE ENGINEER.
7. SEE DEMOLITION AND LAYOUT SHEETS FOR REMOVAL, SALVAGE AND RESETTING SIGNS.

## SIGNING AND STRIPING LEGEND

| DESCRIPTION | SYMBOL |
|---|---|
| EXISTING SIGN (ONE POST) | ⊢ |
| EXISTING SIGN (ON POLE) | ⊳ |
| DIRECTION OF TRAVEL (NOT PAVEMENT MARKING) | ⇦ |
| EXISTING LANE DIMENSION | (12') |
| PROPOSED LANE DIMENSION | 12' |
| TYPICAL | TYP |

## SIGNING AND STRIPING CONSTRUCTION NOTES *

| DESCRIPTION | SYMBOL |
|---|---|
| EXISTING SIGN AND/OR STRIPING TO REMAIN | E |
| INSTALL PAVEMENT MARKING OR ARROW AS NOTED PER CALTRANS STANDARD PLANS A20A THROUGH A24F AND A90A. | PM |
| REMOVE CONFLICTING PAVEMENT DELINEATION BY WATER BLASTING OR OTHER CITY-APPROVED METHOD | RP |
| REMOVE AND SALVAGE SIGN AND POSTED AS NOTED. | RS |
| PAINT CURB RED | 1 |
| PAINT CURB BLUE | 2 |

*THESE CONSTRUCTION NOTES APPLY ONLY TO THIS SHEET.

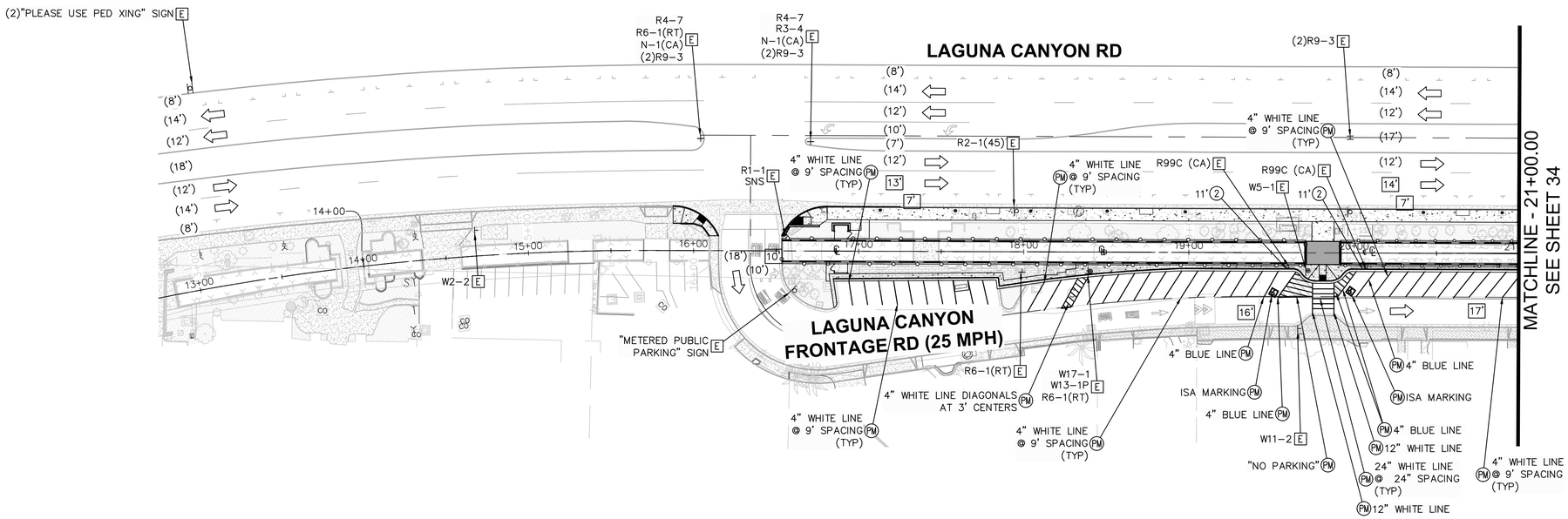


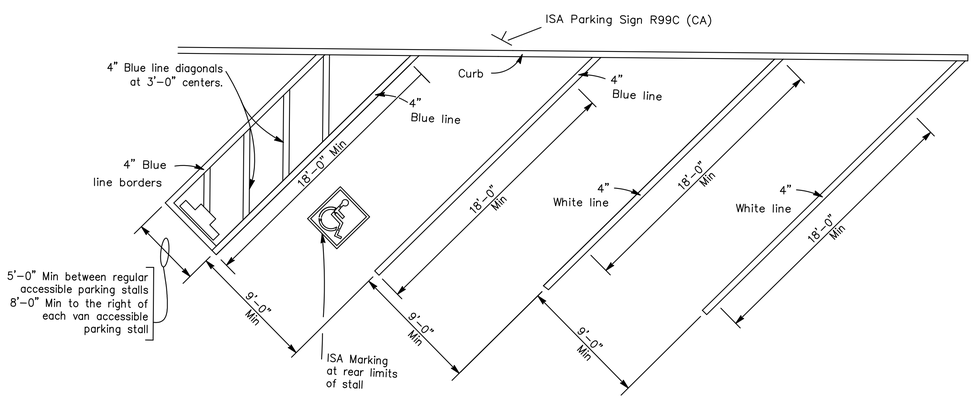


DETAIL "A"
DIAGONAL PARKING STALLS

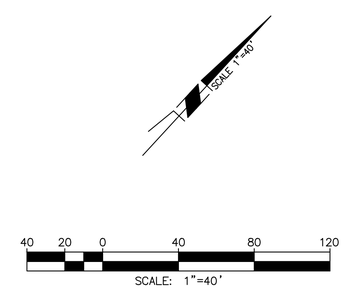


COUNTY OF ORANGE CALIFORNIA

| MARK | DESCRIPTION | DATE | APPR. |
|---|---|---|---|
| | | | |

PREPARED UNDER THE RESPONSIBLE CHARGE OF:
REGISTERED PROFESSIONAL ENGINEER MARC S. VIOLETT No. 73486 Exp. 12/31/2022 STATE OF CALIFORNIA
MARC S. VIOLETT, P.E. — DATE 02/28/22

DESIGNED BY: BL
DRAWN BY: BL
CHECKED BY: MV
DRAWING NUMBER:
FILE NAME: XXXXXXXXXXXXXXXXXXX
PLOT DATE: 02/28/2022
SCALE: AS SHOWN

County of Orange OC Public Works

PREPARED BY: Michael Baker INTERNATIONAL
5 Hutton Centre Drive, Suite 500, Santa Ana, CA 92707
Phone: (949) 472-3505 MBAKERINTL.COM

LAGUNA CANYON CHANNEL REPLACEMENT
OCFCD FACILITY NO. I02

SIGNING AND STRIPING PLAN - SHEET 1

SHEET 33 OF 41

REPLACEMENT OF LAGUNA CANYON CHANNEL OCFCD FACILITY No. I02



EXHIBIT B

## SIGNING AND STRIPING GENERAL NOTES

1. CONTRACTOR SHALL INSTALL SIGNING AND STRIPING IN ACCORDANCE WITH THE APPROVED PLAN.
2. TRAFFIC STRIPES, PAVEMENT MARKINGS, AND RAISED PAVEMENT MARKERS SHALL BE MANUFACTURED AND INSTALLED PER CALTRANS PUBLICATION CA-MUTCD LATEST REVISION, CALTRANS STANDARD PLANS AND CALTRANS STANDARD SPECIFICATIONS, LATEST EDITIONS ADOPTED BY THE ORANGE COUNTY BOARD OF SUPERVISORS.
3. ALL STRIPES, SIGNS, AND PAVEMENT MARKINGS SHALL BE REFLECTORIZED.
4. ALL STRIPING AND MARKINGS DETAILS SHALL MATCH CALTRANS STANDARD PLAN DETAILS.
5. ALL CONFLICTING STRIPES AND PAVEMENT MARKINGS SHALL BE REMOVED BY SANDBLASTING. CONFLICTING SIGNS AND RAISED PAVEMENT MARKERS SHALL BE REMOVED. ALL REMOVALS OF SIGNS AND MARKINGS SHALL BE THE RESPONSIBILITY OF THE DEVELOPER OR APPLICANT.
6. NEW APPLICATIONS OF PAINT SHALL BE APPLIED IN TWO (2) EQUAL THICKNESS TOTALING THE MINIMUM WET THICKNESS INDICATED IN STANDARD SPECIFICATION SECTION 310-5.6.5, "TRAFFIC STRIPES AND MARKINGS", AND SHALL INCLUDE 50% OF THE REQUIRED BEADS WITH EACH APPLICATION WHEN APPLIED, PAINT SHALL HAVE A MINIMUM SEVEN DAY PERIOD BETWEEN APPLICATIONS UNLESS OTHERWISE BY THE ENGINEER.
7. SEE DEMOLITION AND LAYOUT SHEETS FOR REMOVAL, SALVAGE AND RESETTING SIGNS.

## SIGNING AND STRIPING LEGEND

| DESCRIPTION | SYMBOL |
|---|---|
| EXISTING SIGN (ONE POST) | ⊢ |
| EXISTING SIGN (ON POLE) | ⊳ |
| DIRECTION OF TRAVEL (NOT PAVEMENT MARKING) | ⇦ |
| EXISTING LANE DIMENSION | (12') |
| PROPOSED LANE DIMENSION | 12' |
| TYPICAL | TYP |

## SIGNING AND STRIPING CONSTRUCTION NOTES *

| DESCRIPTION | SYMBOL |
|---|---|
| EXISTING SIGN AND/OR STRIPING TO REMAIN | E |
| INSTALL PAVEMENT MARKING OR ARROW AS NOTED PER CALTRANS STANDARD PLANS A20A THROUGH A24F AND A90A. | PM |
| REMOVE CONFLICTING PAVEMENT DELINEATION BY WATER BLASTING OR OTHER CITY-APPROVED METHOD | RP |
| REMOVE AND SALVAGE SIGN AND POSTED AS NOTED. | RS |
| PAINT CURB RED | 1 |
| PAINT CURB BLUE | 2 |

*THESE CONSTRUCTION NOTES APPLY ONLY TO THIS SHEET.

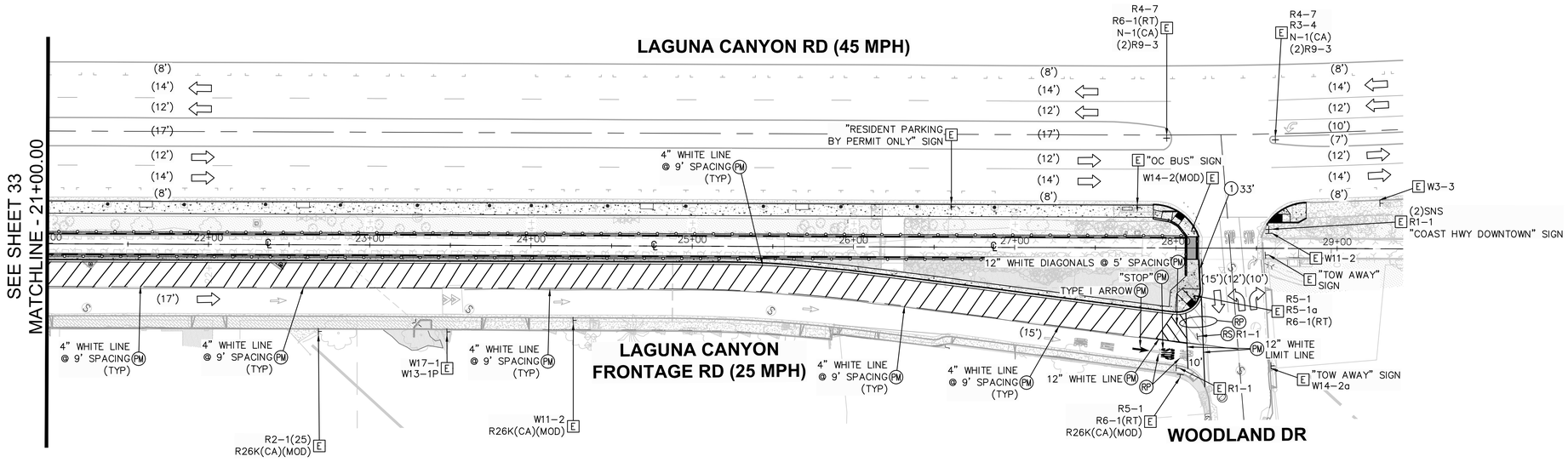


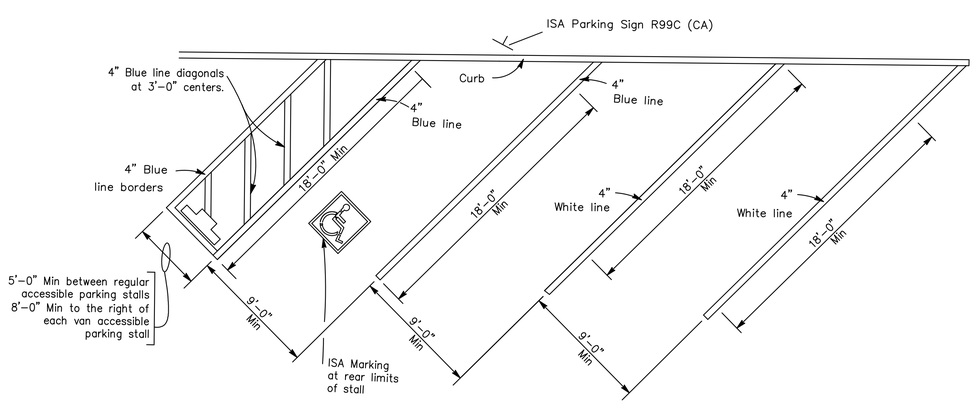


DETAIL "A"
DIAGONAL PARKING STALLS

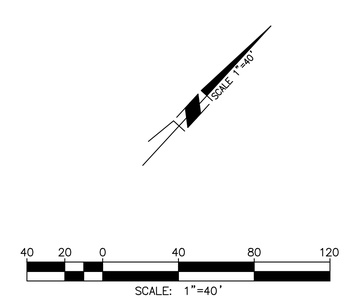


COUNTY OF ORANGE CALIFORNIA

| MARK | DESCRIPTION | DATE | APPR. |
|---|---|---|---|

PREPARED UNDER THE RESPONSIBLE CHARGE OF:
REGISTERED PROFESSIONAL ENGINEER MARC S. VIOLETT No. 73486 Exp. 12/31/2022 CIVIL STATE OF CALIFORNIA
02/28/22 DATE
MARC S. VIOLETT, P.E.

DESIGNED BY: BL
DRAWN BY: BL
CHECKED BY: MV
DRAWING NUMBER:
FILE NAME: XXXXXXXXXXXXXXXXXXXX
PLOT DATE: 02/28/2022
SCALE: AS SHOWN

County of Orange OC Public Works

PREPARED BY: Michael Baker INTERNATIONAL
5 Hutton Centre Drive, Suite 500, Santa Ana, CA 92707
Phone: (949) 472-3505 MBAKERINTL.COM

LAGUNA CANYON CHANNEL REPLACEMENT
OCFCD FACILITY NO. I02

SIGNING AND STRIPING PLAN - SHEET 2

SHEET
34
SHEET 34 OF 41

REPLACEMENT OF LAGUNA CANYON CHANNEL OCFCD FACILITY No. I02



EXHIBIT B

## TRAFFIC CONTROL GENERAL NOTES

1. ALL TEMPORARY TRAFFIC CONTROL WORK FOR CONSTRUCTION SHALL CONFORM TO THE LATEST EDITION OF THE CALIFORNIA MANUAL ON UNIFORM TRAFFIC CONTROL DEVICES (CA–MUTCD). STATE OF CALIFORNIA DEPARTMENT OF TRANSPORTATION (CALTRANS) STANDARD SPECIFICATIONS AND STANDARD PLANS, AND ALL OCCUPATIONAL SAFETY AND HEALTH ADMINISTRATION (O.S.H.A.) REQUIREMENTS AS APPLICABLE.
2. THE CONTRACTOR SHALL COMPLY WITH THE REQUIREMENTS OF THE AMERICAN DISABILITY ACT (ADA) ACCESSIBILITY GUIDELINES AND WITH THE CALIFORNIA ACCESSIBILITY GUIDELINES AS RELATED TO PEDESTRIAN ACCESS AND SHALL MAINTAIN PEDESTRIAN ACCESS AND SHALL MAINTAIN PEDESTRIAN ACCESS AT ALL TIMES PER ADA REQUIREMENTS. SIDEWALK CLOSURE/DETOUR SHALL COMPLY WITH THE LATEST EDITION OF THE CALIFORNIA MANUAL ON UNIFORM TRAFFIC CONTROL DEVICES (CA–MUTCD).
3. CALTRANS RESERVES THE RIGHT TO OBSERVE THESE TRAFFIC CONTROL PLANS IN USE AND TO MAKE ANY NECESSARY CHANGES AS FIELD CONDITIONS WARRANT. ANY CHANGES SHALL SUPERSEDE THESE PLANS AND BE DONE PER THE LATEST EDITION OF THE CALIFORNIA MANUAL ON UNIFORM TRAFFIC CONTROL DEVICES (CA–MUTCD) WITH THE APPROVAL OF THE RESIDENT ENGINEER. REVISED TRAFFIC CONTROL PLANS MAY BE REQUIRED BY CALTRANS. EXACT LOCATION OF ALL EQUIPMENT AND TRAFFIC CONTROL DEVICES SHALL BE DETERMINED BY THE CALTRANS INSPECTOR.
4. ALL PRIVATE DRIVEWAYS AND SIDE STREETS SHALL BE KEPT OPEN AT ALL TIMES EXCEPT WHEN CONSTRUCTION TAKES PLACE DIRECTLY IN FRONT OF THE DRIVEWAYS/SIDE STREETS. ALL OPEN EXCAVATIONS ON PUBLIC STREETS DURING THE NON–WORKING HOURS SHALL BE BACK–FILLED OR STEEL–PLATED (ANTI–SKID PLATES) FOR TRAFFIC TO THE SATISFACTION OF THE CITY INSPECTOR.
5. IT IS THE RESPONSIBILITY OF THE CONTRACTOR PERFORMING WORK ON A PUBLIC STREET TO INSTALL MAINTAIN CONTROL DEVICES AS SHOWN HEREON. AS WELL AS ANY SUCH ADDITIONAL DEVICES AS MAY BE REQUIRED TO ENSURE THE SAFE MOVEMENT OF THE TRAFFIC AND PEDESTRIANS THROUGH OR AROUND THE WORK AREA.
6. ALL TRAFFIC LANES SHALL HAVE MINIMUM OF FIVE (5) FEET CLEARANCE FROM OPEN EXCAVATIONS AND A MINIMUM OF TWO (2) FEET FROM VERTICAL OBSTRUCTIONS.
7. ALL SIGNS SHALL CONFORM TO THE LATEST EDITION OF THE CALIFORNIA MANUAL ON UNIFORM TRAFFIC CONTROL DEVICES (CA–MUTCD) AND THE UNITED STATES DEPARTMENT OF TRANSPORTATION BOOK OF STANDARD HIGHWAY SIGNS AND MARKINGS. ALL NEW SIGNS SHALL BE THE STANDARD SIZE AS SHOWN IN THE STANDARD HIGHWAY SIGNS. UNLESS SHOWN OTHERWISE ON THE PLANS, NO SIGNS SHALL OVERLAP. ALL TUBULAR DELINEATORS SHALL BE 36" MINIMUM HEIGHT AND CONES SHALL BE 28" MINIMUM HEIGHT AND SHALL INCLUDE A 6" AND 4" HIGH INTENSITY REFLECTORIZED SLEEVES.
8. NO WEEKEND AND/OR HOLIDAY CLOSURE SHALL BE ALLOWED DURING CONSTRUCTION.
9. NO LANE CLOSURES BETWEEN THE HOURS OF 6:00AM TO 9:00AM AND BETWEEN 3:00PM TO 6:00PM, MONDAY THROUGH FRIDAY.
10. NO FULL CLOSURES SHALL BE ALLOWED DURING CONSTRUCTION.
11. THE CONTRACTOR WILL ENSURE CONTINUOUS PEDESTRIAN AND BICYCLE ACCESS DURING CONSTRUCTION.
12. THE CONTRACTOR TO AVOID BLOCKING PEDESTRIAN PATHWAY WITH BARRICADE OR SIGNAGE.
13. ALL PEDESTRIAN FACILITIES SHALL CONFORM TO DIB 82–06.

## TRAFFIC CONTROL LEGEND

| DESCRIPTION | SYMBOL |
|---|---|
| TYPE II BARRICADE | |
| TYPE II BARRICADE WITH SIGN AS NOTED ON PLAN | |
| EXISTING SIGN (ONE POST) | |
| EXISTING SIGN (ON POLE) | |
| SURFACE–MOUNTED CHANNELIZER (CA) | • |
| SOLAR/BATTERY POWERED FLASHING ARROW SIGN (FAS) | |
| DIRECTION OF TRAVEL (NOT PAVEMENT MARKING) | |
| EXISTING LANE DIMENSION | (12') |
| CONSTRUCTION LANE DIMENSION | 12' |
| VARYING LANE DIMENSION | VAR |
| TYPICAL | TYP |
| RAILING (TYPE K) | |
| WATER FILLED BARRIER | |
| CRASH CUSHION | |
| SCREENED CHAIN LINK FENCE | |
| FLAGGER | |
| CONSTRUCTION WORK AREA THIS STAGE | |

## TRAFFIC SIGN QUANTITIES

| SIGN | QUANTITY |
|---|---|
| C23(CA) | 3 |
| C30A(CA) | 1 |
| C31A(CA) | 1 |
| G20–2 | 3 |
| M4–9b(LT) | 1 |
| M4–9b(RT) | 1 |
| R9–9 | 2 |
| R9–10 | 1 |
| R26(CA) | 8 |
| R28(CA)(RT) | 2 |
| R28(CA)(LT) | 2 |

## PROPOSED SIGN LEGEND

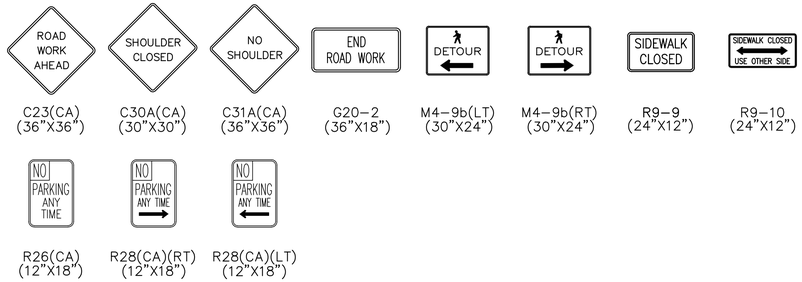


## TRAFFIC CONTROL CONSTRUCTION NOTES

| DESCRIPTION | SYMBOL |
|---|---|
| EXISTING SIGN AND/OR STRIPING TO REMAIN | E |
| PLACE CHANNELIZER (CA) | 1 |
| PLACE CONSTRUCTION AREA SIGNS | 2 |
| PLACE TYPE II FLASHING ARROW SIGN | 3 |
| PLACE TEMPORARY RAILING (TYPE K) | 4 |
| PLACE TYPE II BARRICADE | 5 |
| PLACE WATER FILLED BARRIER | 6 |
| PLACE ABSORB 350 CRASH CUSHION | 7 |
| PLACE CHAIN LINK FENCE | 8 |
| TEMPORARY CALTRANS PAVEMENT DELINEATION (PD) DETAIL NUMBER PER STANDARD PLAN | # |
| TEMPORARY PAVEMENT MARKING AS NOTED | PM |
| REMOVE CONFLICTING PAVEMENT DELINEATION BY WATER BLASTING OR OTHER CITY–APPROVED METHOD | RP |

## CROSS SECTION A–A (NTS)

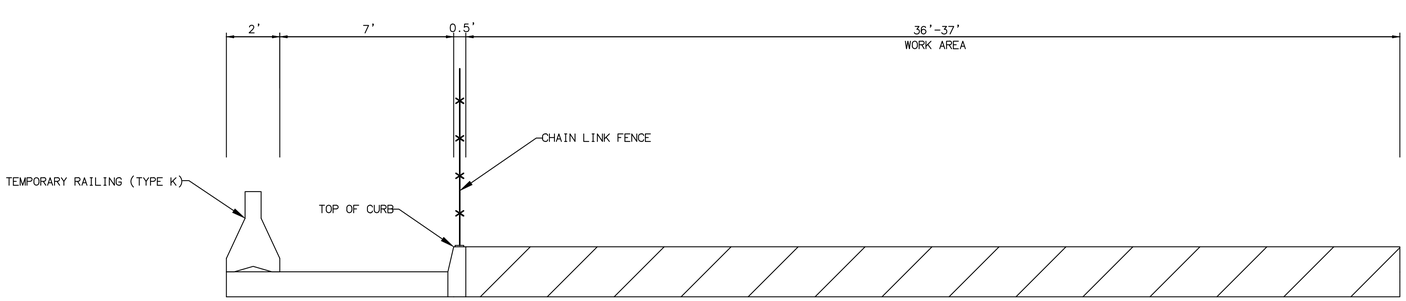


COUNTY OF ORANGE CALIFORNIA

| MARK | DESCRIPTION | DATE | APPR. |
|---|---|---|---|
| | | | |

PREPARED UNDER THE RESPONSIBLE CHARGE OF:

REGISTERED PROFESSIONAL ENGINEER MARC S. VIOLETT No. 73486 Exp. 12/31/2022 CIVIL STATE OF CALIFORNIA

MARC S. VIOLETT, P.E. — DATE 02/28/22

DESIGNED BY: BL
DRAWN BY: BL
CHECKED BY: MV
DRAWING NUMBER:
FILE NAME: XXXXXXXXXXXXXXXXXX
PLOT DATE: 02/28/2022
SCALE: AS SHOWN

County of Orange — OC Public Works

PREPARED BY: Michael Baker INTERNATIONAL
5 Hutton Centre Drive, Suite 500, Santa Ana, CA 92707
Phone: (949) 472-3505 - MBAKERINTL.COM

LAGUNA CANYON CHANNEL REPLACEMENT
OCFCD FACILITY NO. I02

TRAFFIC CONTROL PLAN NOTES AND LEGEND

SHEET 35 — SHEET 35 OF 41

REPLACEMENT OF LAGUNA CANYON CHANNEL OCFCD FACILITY No. I02



EXHIBIT B

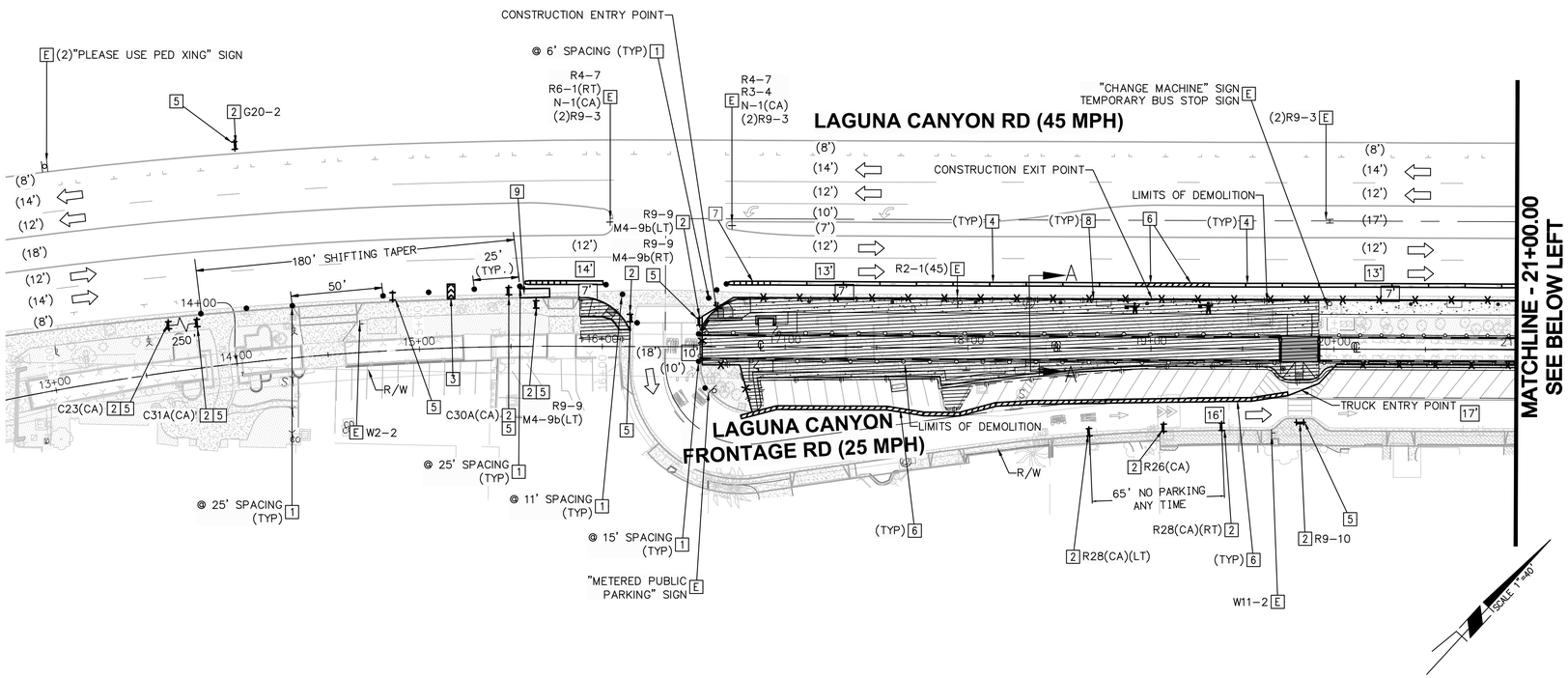


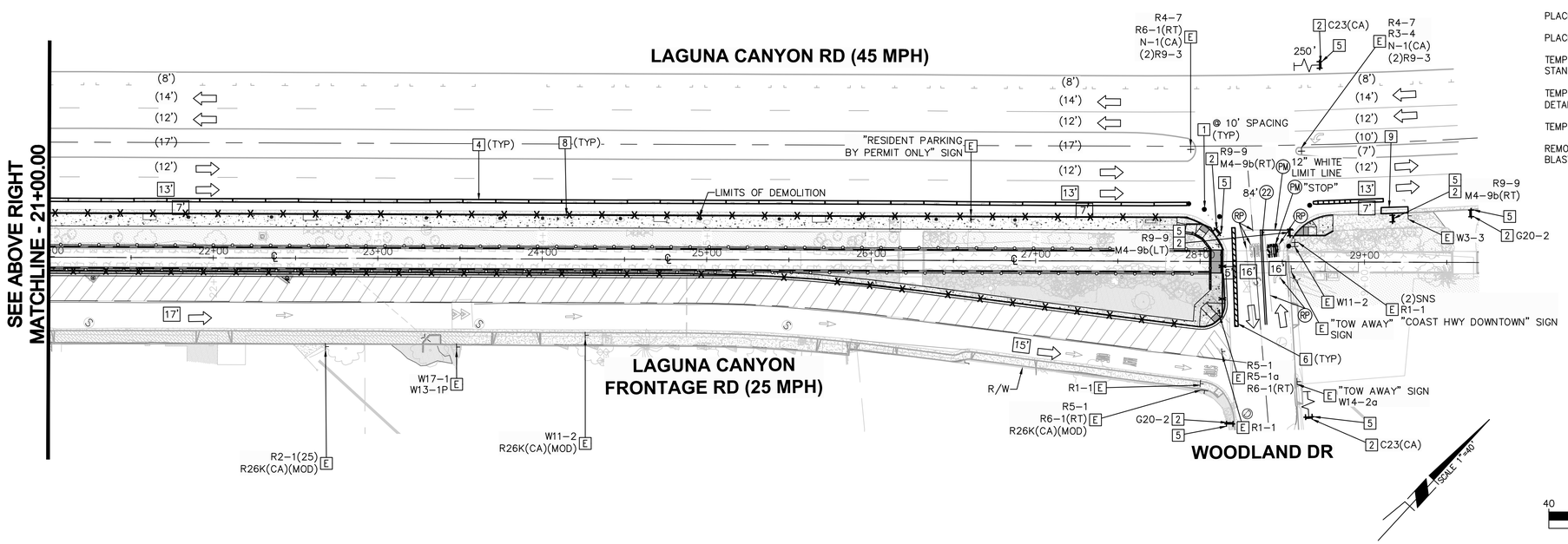


## TRAFFIC CONTROL LEGEND

| DESCRIPTION | SYMBOL |
|---|---|
| TYPE II BARRICADE | |
| TYPE II BARRICADE WITH SIGN AS NOTED ON PLAN | |
| EXISTING SIGN (ONE POST) | |
| EXISTING SIGN (ON POLE) | |
| SURFACE-MOUNTED CHANNELIZER (CA) | |
| SOLAR/BATTERY POWERED FLASHING ARROW SIGN (FAS) (TYPE B PER FIGURE 6F-6 OF THE CAMUTCD) | |
| DIRECTION OF TRAVEL (NOT PAVEMENT MARKING) | |
| EXISTING LANE DIMENSION | (12') |
| CONSTRUCTION LANE DIMENSION | 12' |
| VARYING LANE DIMENSION | VAR |
| TYPICAL | TYP |
| RAILING (TYPE K) | |
| WATER FILLED BARRIER | |
| CRASH CUSHION | |
| SCREENED CHAIN LINK FENCE | |
| FLAGGER | |
| CONSTRUCTION WORK AREA THIS STAGE | |

## TRAFFIC CONTROL CONSTRUCTION NOTES

| DESCRIPTION | SYMBOL |
|---|---|
| EXISTING SIGN AND/OR STRIPING TO REMAIN | E |
| PLACE CHANNELIZER (CA) | 1 |
| PLACE CONSTRUCTION AREA SIGNS | 2 |
| PLACE TYPE II FLASHING ARROW SIGN | 3 |
| PLACE TEMPORARY RAILING (TYPE K) | 4 |
| PLACE TYPE II BARRICADE | 5 |
| PLACE WATER FILLED BARRIER | 6 |
| PLACE ABSORB 350 CRASH CUSHION | 7 |
| PLACE CHAIN LINK FENCE | 8 |
| TEMPORARY ACCESS ROUTE RAMP PER CALTRANS STANDARD PLAN T33 | 9 |
| TEMPORARY CALTRANS PAVEMENT DELINEATION (PD) DETAIL NUMBER PER STANDARD PLAN | # |
| TEMPORARY PAVEMENT MARKING AS NOTED | PM |
| REMOVE CONFLICTING PAVEMENT DELINEATION BY WATER BLASTING OR OTHER CITY-APPROVED METHOD | RP |

40 20 0 40 80 120
SCALE: 1"=40'

COUNTY OF ORANGE CALIFORNIA

| MARK | DESCRIPTION | DATE | APPR. |
|---|---|---|---|

PREPARED UNDER THE RESPONSIBLE CHARGE OF:
REGISTERED PROFESSIONAL ENGINEER MARC S. VIOLETT No. 73486 Exp. 12/31/2022 STATE OF CALIFORNIA
02/28/22 DATE
MARC S. VIOLETT, P.E.

DESIGNED BY: BL
DRAWN BY: BL
CHECKED BY: MV
DRAWING NUMBER:
FILE NAME: XXXXXXXXXXXXXXXXXXXX
PLOT DATE: 02/28/2022
SCALE: AS SHOWN

PREPARED BY:
Michael Baker INTERNATIONAL
5 Hutton Centre Drive, Suite 500, Santa Ana, CA 92707
Phone: (949) 472-3505 MBAKERINTL.COM

County of Orange OC Public Works

LAGUNA CANYON CHANNEL REPLACEMENT
**OCFCD FACILITY NO. I02**

TRAFFIC CONTROL PLAN - CONSTRUCTION PHASE 1

REPLACEMENT OF LAGUNA CANYON CHANNEL OCFCD FACILITY No. I02

SHEET
36
SHEET 36 OF 41



EXHIBIT B

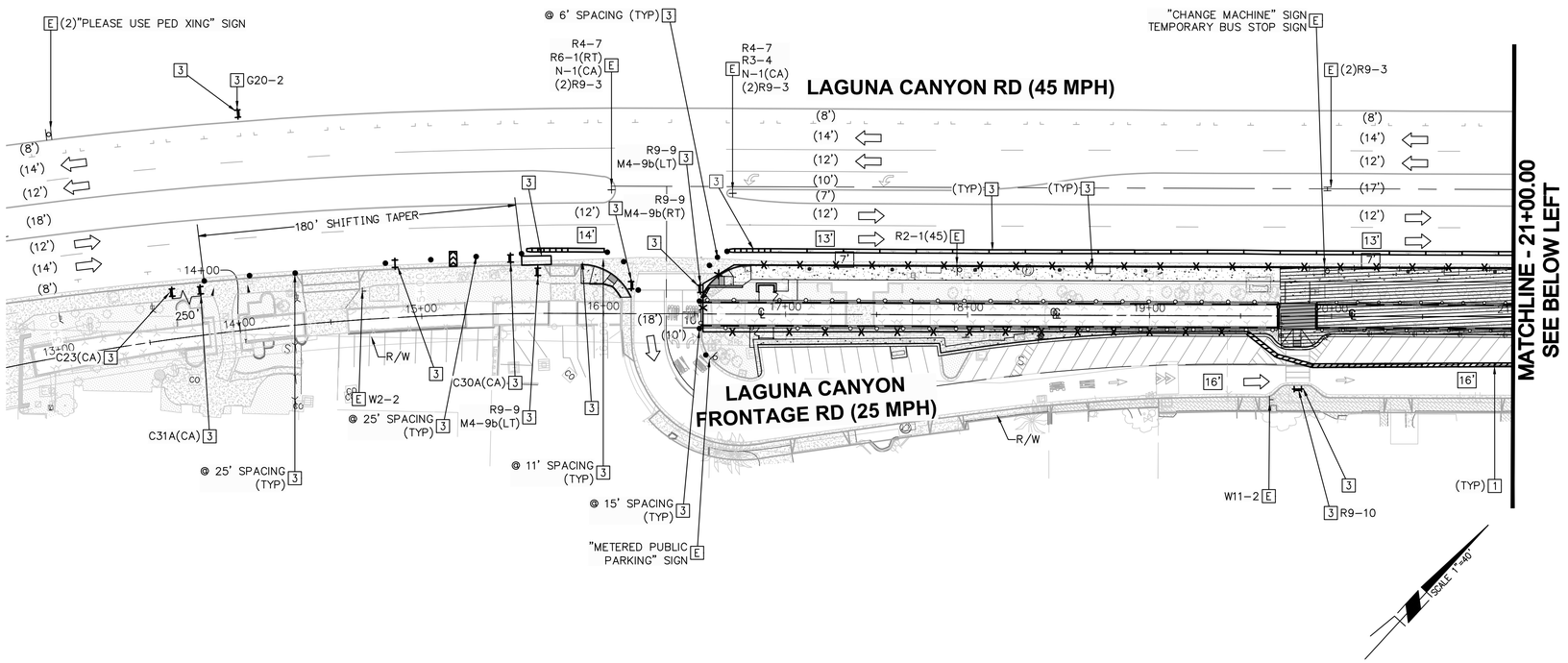


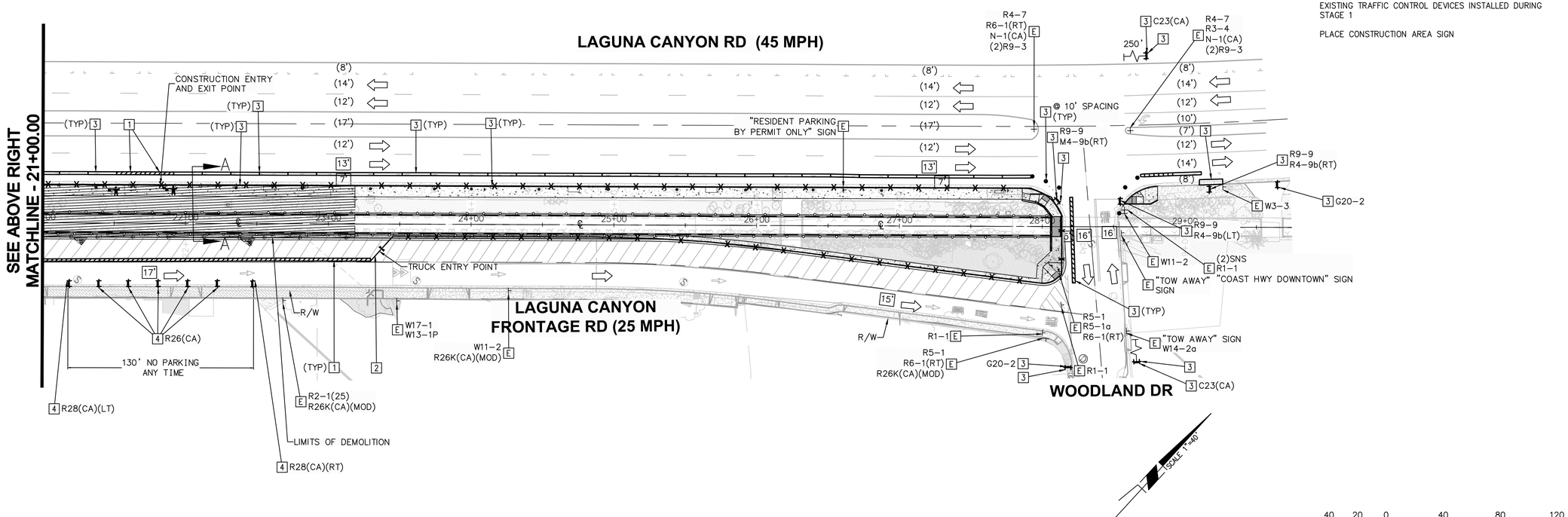


## TRAFFIC CONTROL LEGEND

| DESCRIPTION | SYMBOL |
|---|---|
| TYPE II BARRICADE | |
| TYPE II BARRICADE WITH SIGN AS NOTED ON PLAN | |
| EXISTING SIGN (ONE POST) | |
| EXISTING SIGN (ON POLE) | |
| SURFACE-MOUNTED CHANNELIZER (CA) | |
| SOLAR/BATTERY POWERED FLASHING ARROW SIGN (FAS) (TYPE B PER FIGURE 6F-6 OF THE CAMUTCD) | |
| DIRECTION OF TRAVEL (NOT PAVEMENT MARKING) | |
| EXISTING LANE DIMENSION | (12') |
| CONSTRUCTION LANE DIMENSION | 12' |
| VARYING LANE DIMENSION | VAR |
| TYPICAL | TYP |
| RAILING (TYPE K) | |
| WATER FILLED BARRIER | |
| CRASH CUSHION | |
| SCREENED CHAIN LINK FENCE | |
| FLAGGER | |
| CONSTRUCTION WORK AREA THIS STAGE | |

## TRAFFIC CONTROL CONSTRUCTION NOTES (THIS SHEET ONLY)

| DESCRIPTION | SYMBOL |
|---|---|
| EXISTING SIGN AND/OR STRIPING TO REMAIN | E |
| PLACE WATER FILLED BARRIER | 1 |
| PLACE CHAIN LINK FENCE | 2 |
| EXISTING TRAFFIC CONTROL DEVICES INSTALLED DURING STAGE 1 | 3 |
| PLACE CONSTRUCTION AREA SIGN | 4 |

40 20 0 40 80 120
SCALE: 1"=40'

COUNTY OF ORANGE CALIFORNIA

| MARK | DESCRIPTION | DATE | APPR. |
|---|---|---|---|
| | | | |

PREPARED UNDER THE RESPONSIBLE CHARGE OF:
REGISTERED PROFESSIONAL ENGINEER MARC S. VIOLETT No. 73486 Exp. 12/31/2022 CIVIL STATE OF CALIFORNIA
02/28/22 DATE
MARC S. VIOLETT, P.E.

DESIGNED BY: BL
DRAWN BY: BL
CHECKED BY: MV
DRAWING NUMBER:
FILE NAME: XXXXXXXXXXXXXXXXXX
PLOT DATE: 02/28/2022
SCALE: AS SHOWN

County of Orange OC Public Works

PREPARED BY: Michael Baker INTERNATIONAL
5 Hutton Centre Drive, Suite 500, Santa Ana, CA 92707
Phone: (949) 472-3505 - MBAKERINTL.COM

LAGUNA CANYON CHANNEL REPLACEMENT
**OCFCD FACILITY NO. I02**

TRAFFIC CONTROL PLAN - CONSTRUCTION PHASE 2

REPLACEMENT OF LAGUNA CANYON CHANNEL OCFCD FACILITY No. I02

SHEET
37
SHEET 37 OF 41



EXHIBIT B

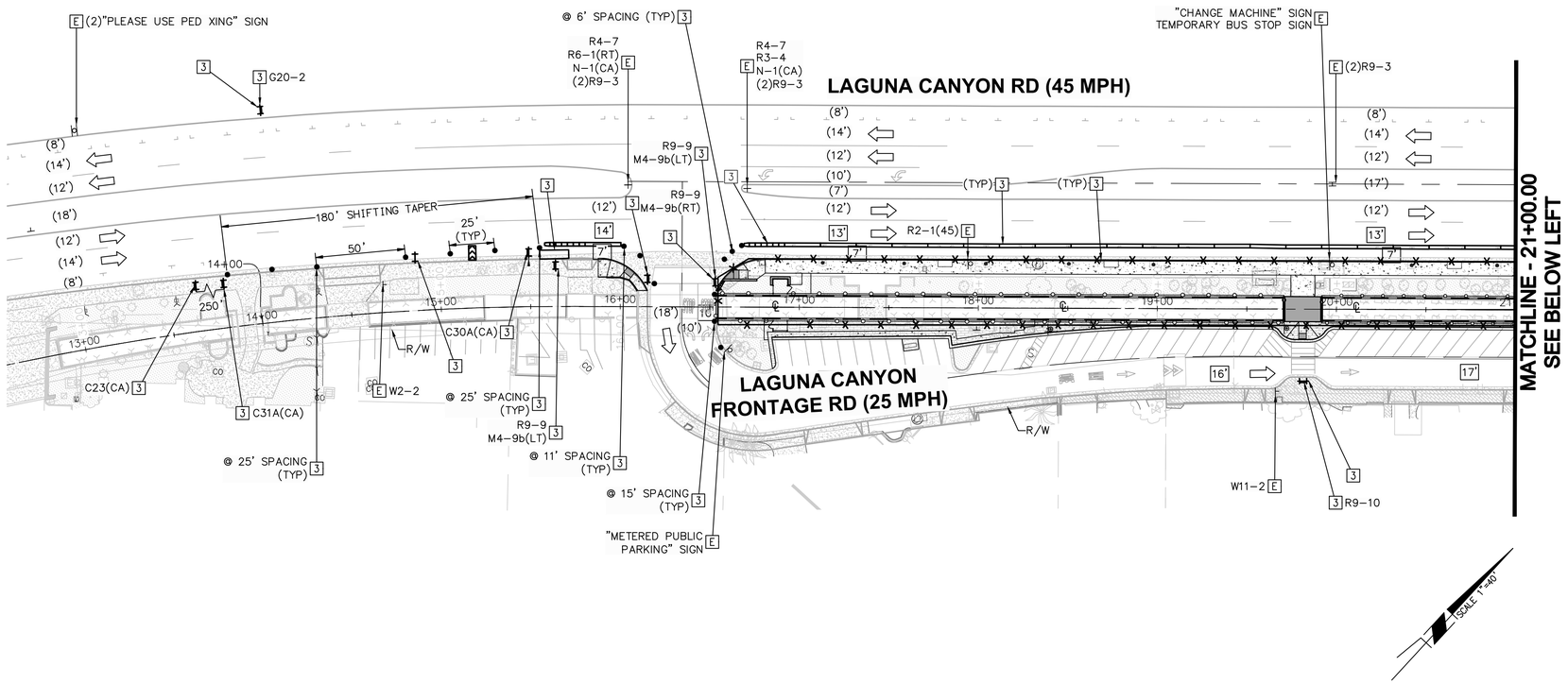


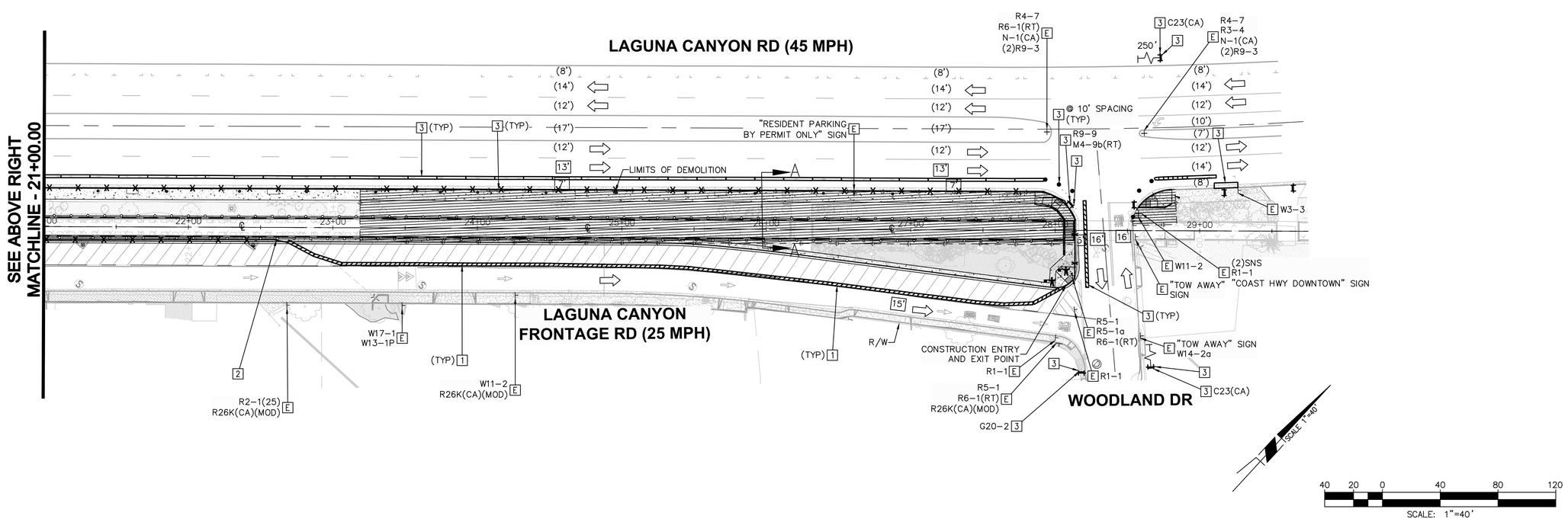


## TRAFFIC CONTROL LEGEND

| DESCRIPTION | SYMBOL |
|---|---|
| TYPE II BARRICADE | |
| TYPE II BARRICADE WITH SIGN AS NOTED ON PLAN | |
| EXISTING SIGN (ONE POST) | |
| EXISTING SIGN (ON POLE) | |
| SURFACE-MOUNTED CHANNELIZER (CA) | |
| SOLAR/BATTERY POWERED FLASHING ARROW SIGN (FAS) | |
| DIRECTION OF TRAVEL (NOT PAVEMENT MARKING) | |
| EXISTING LANE DIMENSION | (12') |
| CONSTRUCTION LANE DIMENSION | 12' |
| VARYING LANE DIMENSION | VAR |
| TYPICAL | TYP |
| RAILING (TYPE K) | |
| WATER FILLED BARRIER | |
| CRASH CUSHION | |
| SCREENED CHAIN LINK FENCE | |
| FLAGGER | |
| CONSTRUCTION WORK AREA THIS STAGE | |

## TRAFFIC CONTROL CONSTRUCTION NOTES (THIS SHEET ONLY)

| DESCRIPTION | SYMBOL |
|---|---|
| EXISTING SIGN AND/OR STRIPING TO REMAIN | E |
| PLACE WATER FILLED BARRIER | 1 |
| PLACE CHAIN LINK FENCE | 2 |
| EXISTING TRAFFIC CONTROL DEVICES INSTALLED DURING STAGE 1 | 3 |

COUNTY OF ORANGE CALIFORNIA

| MARK | DESCRIPTION | DATE | APPR. |
|---|---|---|---|
| | | | |

PREPARED UNDER THE RESPONSIBLE CHARGE OF:
REGISTERED PROFESSIONAL ENGINEER MARC S. VIOLETT No. 73486 Exp. 12/31/2022 STATE OF CALIFORNIA
MARC S. VIOLETT, P.E. — DATE 02/28/22

DESIGNED BY: BL
DRAWN BY: BL
CHECKED BY: MV
DRAWING NUMBER:
FILE NAME: XXXXXXXXXXXXXXXXXX
PLOT DATE: 02/28/2022
SCALE: AS SHOWN

County of Orange — OC Public Works
PREPARED BY: Michael Baker INTERNATIONAL
5 Hutton Centre Drive, Suite 500, Santa Ana, CA 92707 Phone: (949) 472-3505 - MBAKERINTL.COM

LAGUNA CANYON CHANNEL REPLACEMENT
**OCFCD FACILITY NO. I02**

TRAFFIC CONTROL PLAN - CONSTRUCTION PHASE 3

REPLACEMENT OF LAGUNA CANYON CHANNEL OCFCD FACILITY No. I02

SHEET 38 OF 41



EXHIBIT B

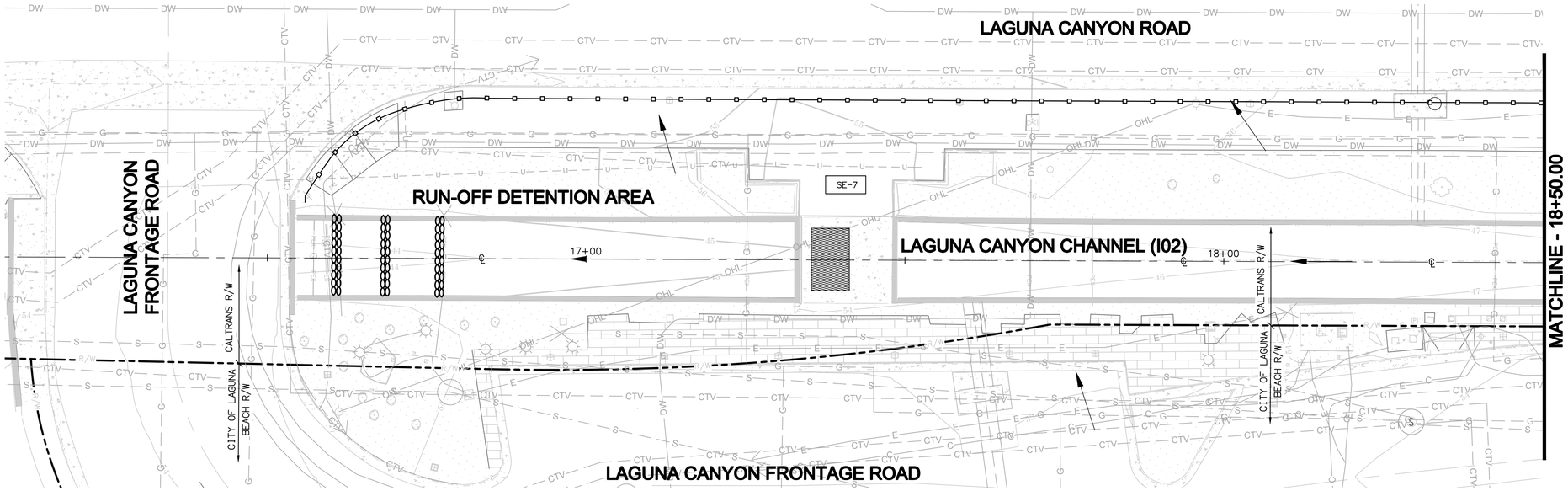


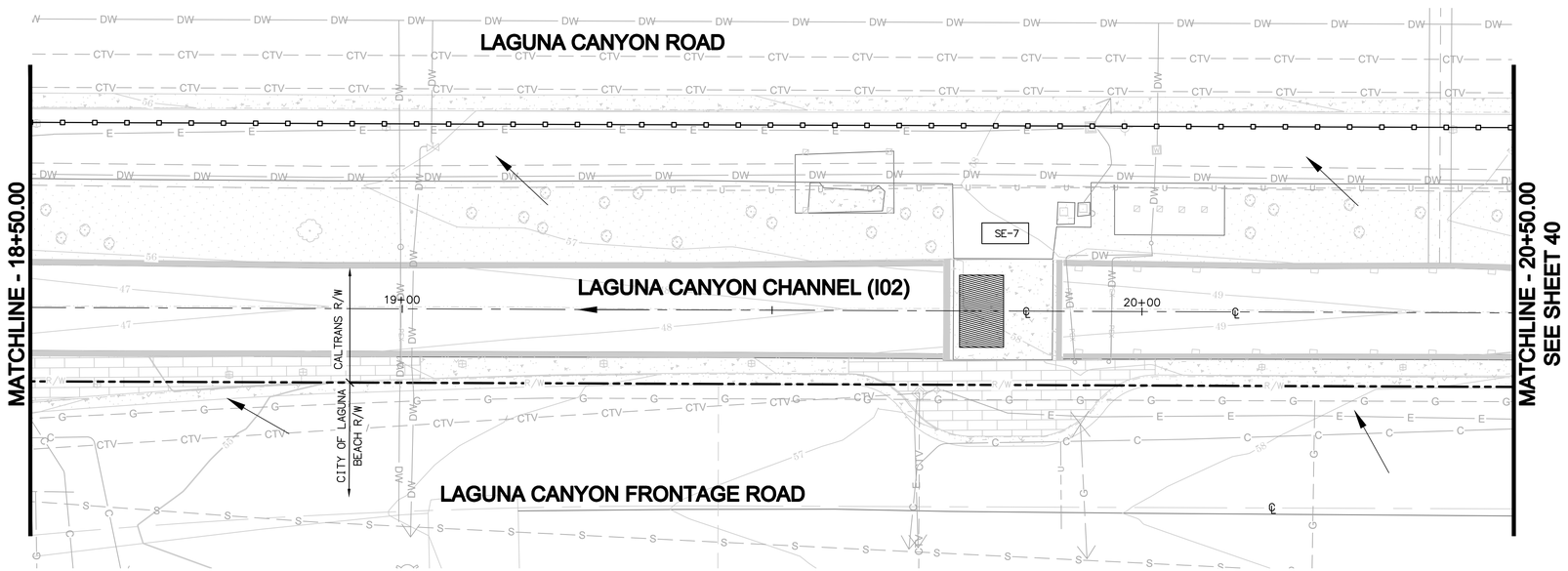


## LEGEND

- DIRECTION OF FLOWS
- PROJECT AREA
- SILT FENCE (SE-1)
- GRAVEL BAG BERM (SE-6)
- SAND BAG BARRIER (SE-8)
- STABILIZED CONSTRUCTION ENTRANCE (TC-1)
- * T — TRAILER
- * CW — CONCRETE WASHOUT
- * EM — VEHICLE & EQUIPMENT MAINTENANCE/STAGING AREA
- * M1 — MATERIAL STORAGE
- * ST — STOCKPILE AREA
- * W — CONSTRUCTION WASTE STORAGE
- * PT — PORTABLE TOILET

* LOCATION TO BE SHOWN BY CONTRACTOR DURING CONSTRUCTION

## BEST MANAGEMENT PRACTICES (BMPs)

TYPICAL AT EACH CONSTRUCTION WORK AREA

| | |
|---|---|
| EC-1 | SCHEDULING |
| EC-2 | PRESERVATION OF EXISTING VEGETATION |
| NS-1 | WATER CONSERVATION PRACTICES |
| NS-2 | DEWATERING OPERATIONS |
| NS-5 | CLEAR WATER DIVERSION |
| NS-6 | ILLICIT CONNECTION/DISCHARGE |
| NS-9 | VEHICLE AND EQUIPMENT FUELING |
| NS-10 | VEHICLE AND EQUIPMENT MAINTENANCE |
| NS-12 | CONCRETE CURING |
| WM-1 | MATERIAL DELIVERY AND STORAGE |
| WM-2 | MATERIAL USE |
| WM-3 | STOCKPILE MANAGEMENT |
| WM-4 | SPILL PREVENTION AND CONTROL |
| WM-5 | SOLID WASTE MANAGEMENT |
| WM-6 | HAZARDOUS WASTE MANAGEMENT |
| WM-8 | CONCRETE WASTE MANAGEMENT |
| WM-9 | SANITARY/SEPTIC WASTE MANAGEMENT |

ACTIVE CONSTRUCTION BMPs

| | |
|---|---|
| EC-7 | GEOTEXTILES AND MATS |
| SE-1 | SILT FENCE |
| SE-6 | GRAVEL BAG BERM |
| SE-8 | SAND BAG BARRIER |
| SE-7 | STREET SWEEPING AND VACUUMING |
| WE-1 | WIND EROSION CONTROL |
| TC-1 | STABILIZED CONSTRUCTION ENTRANCE/EXIT |

NOTES:

1. STAGING, MATERIAL & EQUIPMENT, & TRAILER LOCATION AREAS WILL BE SELECTED DURING CONSTRUCTION. STABILIZED CONSTRUCTION ENTRANCES, TRASH CONTAINERS, PORTABLE TOILETS, AND STOCKPILES WILL BE ADDED TO THE SITE MAP DURING CONSTRUCTION. INSTALL PERIMETER SEDIMENT CONTROLS AROUND STORAGE AREAS.
2. STABLIZED CONSTRUCTION ENTRANCES/ EXITS (TC-1) ARE SHOWN AT APPROXIMATE LOCATIONS DUE TO THE SCALE OF THE MAP. TC-1 SHALL BE INSTALLED AT ALL MAINTENANCE ACCESS ROAD ENTRANCES/ EXITS THAT WILL BE USED ADJACENT TO A PUBLIC ROAD.
3. CONTRACTOR SHALL MONITOR ENTRANCE AND EXIT LOCATIONS TO THE PROJECT SITE AND PROVIDE BMP CONTROLS IN AND OUT OF THE PROJECT SITE WHERE APPLICABLE.
4. BMP LOCATIONS ARE APPROXIMATE. DUE TO THE CHANGING NATURE AND LOCATIONS OF CONSTRUCTION, MINOR ADJUSTMENTS TO BMP PLACEMENT AND SEQUENCE OF BMP IMPLEMENTATION ARE ANTICIPATED IN THE FIELD DURING CONSTRUCTION DUE TO CONSTRAINTS ASSOCIATED WITH CONSTRUCTION ACTIVITIES, SCHEDULING AND UNFORESEEN FIELD CONDITIONS. THE PREPARER, OR THE ASSIGNED DESIGNEE, SHALL APPROVE ALL FIELD ADJUSTMENTS TO THE EROSION AND SEDIMENT CONTROL DRAWINGS (ESCDS).
5. IF LAYDOWN OR STAGING AREAS ARE TO BE RELOCATED WITH THE CURRENT ACTIVE CONSTRUCTION ACTIVITIES, CONTRACTOR SHALL ENSURE ALL AREAS ARE EQUIPPED WITH EFFECTIVE AND APPLICABLE BMPS.
6. ALL STOCKPILES AND AREAS OF EXPOSED SOIL MUST BE COVERED WITH GEOTEXTILES AND MATS, PLASTIC, OR AN EQUIVALENT MATERIAL, PRIOR TO RAIN.
7. A STOCKPILE OF GRAVEL BAGS WILL BE STAGED TO BE DEPLOYED AS PERIMETER CONTROLS PRIOR TO AND DURING RAIN EVENTS ALONG THE DISTURBED ACCESS ROADS AND CONCENTRATED FLOW PATHS.
8. REMOVE ALL EQUIPMENT, MATERIALS, AND STOCKPILES FROM THE CHANNEL WHENEVER THERE IS 20% OR GREATER PROBABILITY OF RAIN IN THE FORECAST.
9. A DIVERSION BERM CONSISTING OF SANDBAGS AND A PIPE IS TO BE INSTALLED ANYWHERE THERE IS ACTIVE CONSTRUCTION AT THE INVERT OF THE CHANNEL.

SCALE 1"=10'

10 5 0 10 20
SCALE: 1"=10'

COUNTY OF ORANGE CALIFORNIA

| MARK | DESCRIPTION | DATE | APPR. |
|---|---|---|---|
| | | | |

PREPARED UNDER THE RESPONSIBLE CHARGE OF:
ANDREW JOSEPH JOHN SIDOR, P.E. — 02/28/22 DATE
REGISTERED PROFESSIONAL ENGINEER ANDREW JOSEPH JOHN SIDOR No. C80015 CIVIL STATE OF CALIFORNIA

DESIGNED BY: AP
DRAWN BY: AP
CHECKED BY: AS
DRAWING NUMBER:
FILE NAME: XXXXXXXXXXXXXXXXXXXX
PLOT DATE: 02/28/2022
SCALE: AS SHOWN

County of Orange OC Public Works
PREPARED BY: Michael Baker INTERNATIONAL
5 Hutton Centre Drive, Suite 500, Santa Ana, CA 92707 Phone: (949) 472-3505 - MBAKERINTL.COM

LAGUNA CANYON CHANNEL REPLACEMENT
**OCFCD FACILITY NO. I02**

EROSION AND SEDIMENT CONTROL - SHEET 1

SHEET
39
SHEET 39 OF 41

REPLACEMENT OF LAGUNA CANYON CHANNEL OCFCD FACILITY No. I02

H:\PDATA\180154\PROJECT INFO\WATER_QUALITY\ESCP\ESCDS\CADD\LAGUNA CANYON - ESCP MAP.DWG CHONG, CANDICE 3/10/2022 5:18 PM



EXHIBIT B

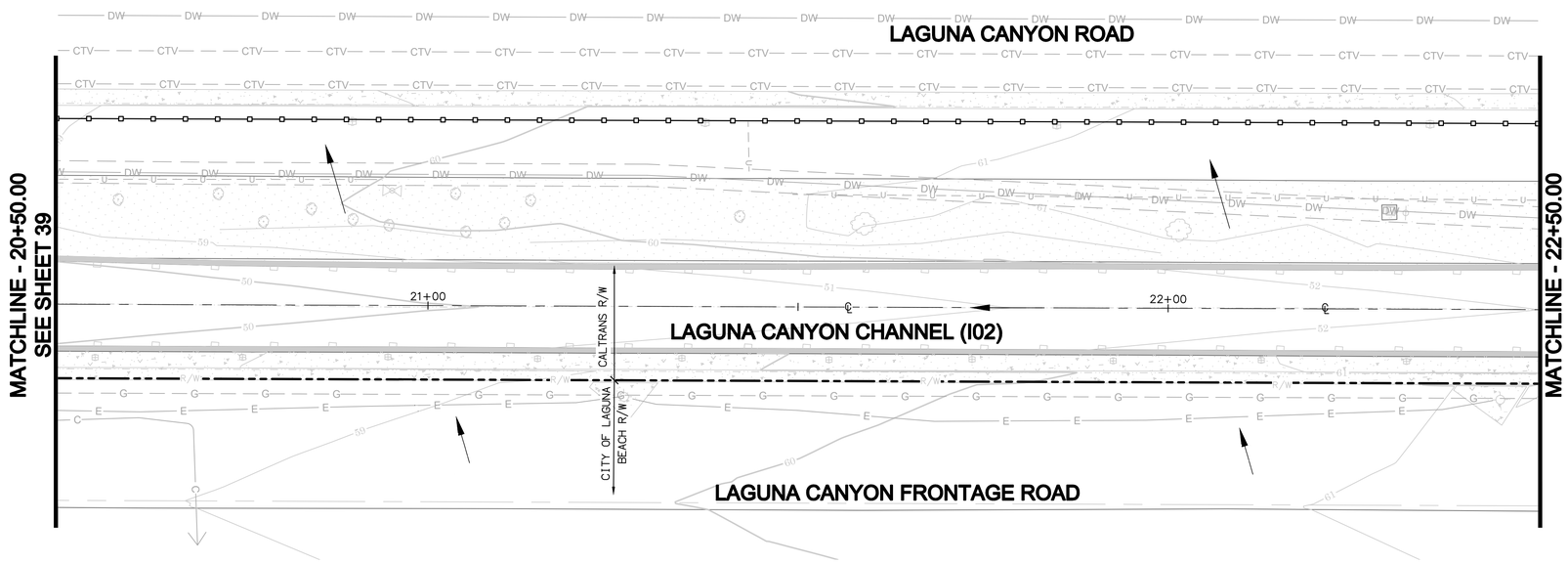


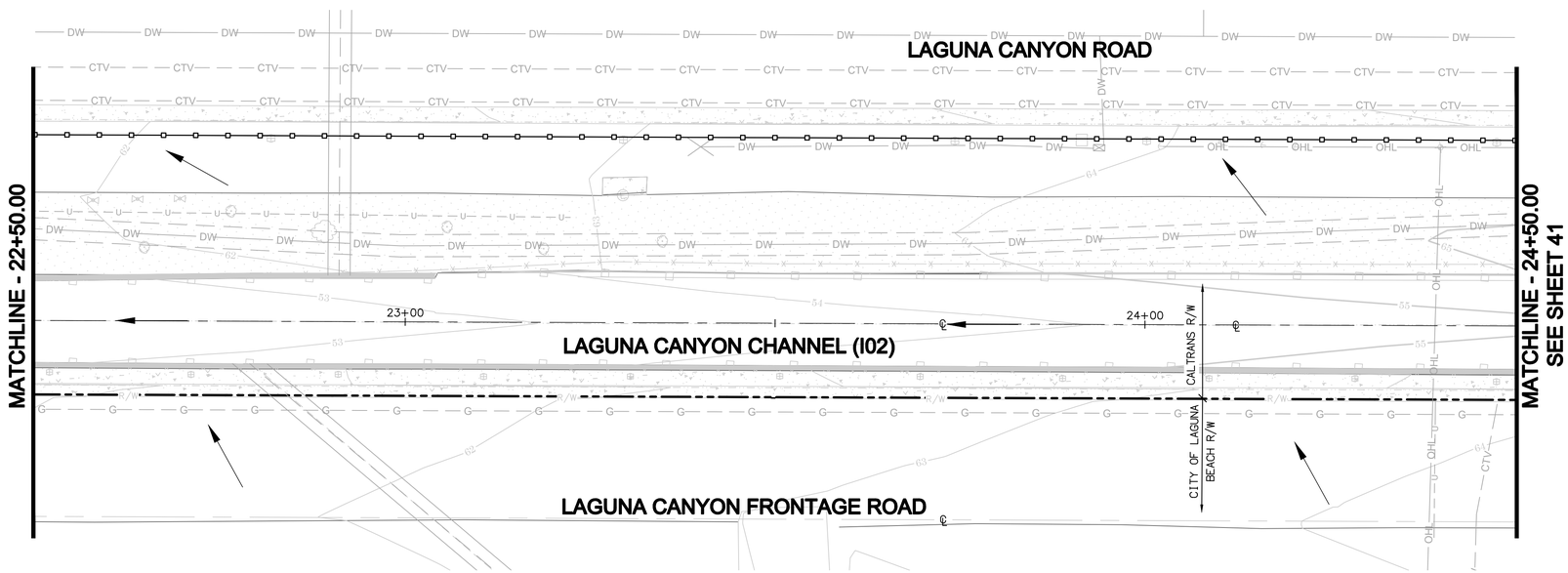


## LEGEND

- DIRECTION OF FLOWS
- PROJECT AREA
- SILT FENCE (SE-1)
- GRAVEL BAG BERM (SE-6)
- SAND BAG BARRIER (SE-8)
- STABILIZED CONSTRUCTION ENTRANCE (TC-1)
- * T — TRAILER
- * CW — CONCRETE WASHOUT
- * EM — VEHICLE & EQUIPMENT MAINTENANCE/STAGING AREA
- * M1 — MATERIAL STORAGE
- * ST — STOCKPILE AREA
- * W — CONSTRUCTION WASTE STORAGE
- * PT — PORTABLE TOILET

* LOCATION TO BE SHOWN BY CONTRACTOR DURING CONSTRUCTION

## BEST MANAGEMENT PRACTICES (BMPs)

TYPICAL AT EACH CONSTRUCTION WORK AREA

| | |
|---|---|
| EC-1 | SCHEDULING |
| EC-2 | PRESERVATION OF EXISTING VEGETATION |
| NS-1 | WATER CONSERVATION PRACTICES |
| NS-2 | DEWATERING OPERATIONS |
| NS-5 | CLEAR WATER DIVERSION |
| NS-6 | ILLICIT CONNECTION/DISCHARGE |
| NS-9 | VEHICLE AND EQUIPMENT FUELING |
| NS-10 | VEHICLE AND EQUIPMENT MAINTENANCE |
| NS-12 | CONCRETE CURING |
| WM-1 | MATERIAL DELIVERY AND STORAGE |
| WM-2 | MATERIAL USE |
| WM-3 | STOCKPILE MANAGEMENT |
| WM-4 | SPILL PREVENTION AND CONTROL |
| WM-5 | SOLID WASTE MANAGEMENT |
| WM-6 | HAZARDOUS WASTE MANAGEMENT |
| WM-8 | CONCRETE WASTE MANAGEMENT |
| WM-9 | SANITARY/SEPTIC WASTE MANAGEMENT |

ACTIVE CONSTRUCTION BMPs

| | |
|---|---|
| EC-7 | GEOTEXTILES AND MATS |
| SE-1 | SILT FENCE |
| SE-6 | GRAVEL BAG BERM |
| SE-8 | SAND BAG BARRIER |
| SE-7 | STREET SWEEPING AND VACUUMING |
| WE-1 | WIND EROSION CONTROL |
| TC-1 | STABILIZED CONSTRUCTION ENTRANCE/EXIT |

NOTES:

1. STAGING, MATERIAL & EQUIPMENT, & TRAILER LOCATION AREAS WILL BE SELECTED DURING CONSTRUCTION. STABILIZED CONSTRUCTION ENTRANCES, TRASH CONTAINERS, PORTABLE TOILETS, AND STOCKPILES WILL BE ADDED TO THE SITE MAP DURING CONSTRUCTION. INSTALL PERIMETER SEDIMENT CONTROLS AROUND STORAGE AREAS.
2. STABLIZED CONSTRUCTION ENTRANCES/ EXITS (TC-1) ARE SHOWN AT APPROXIMATE LOCATIONS DUE TO THE SCALE OF THE MAP. TC-1 SHALL BE INSTALLED AT ALL MAINTENANCE ACCESS ROAD ENTRANCES/ EXITS THAT WILL BE USED ADJACENT TO A PUBLIC ROAD.
3. CONTRACTOR SHALL MONITOR ENTRANCE AND EXIT LOCATIONS TO THE PROJECT SITE AND PROVIDE BMP CONTROLS IN AND OUT OF THE PROJECT SITE WHERE APPLICABLE.
4. BMP LOCATIONS ARE APPROXIMATE. DUE TO THE CHANGING NATURE AND LOCATIONS OF CONSTRUCTION, MINOR ADJUSTMENTS TO BMP PLACEMENT AND SEQUENCE OF BMP IMPLEMENTATION ARE ANTICIPATED IN THE FIELD DURING CONSTRUCTION DUE TO CONSTRAINTS ASSOCIATED WITH CONSTRUCTION ACTIVITIES, SCHEDULING AND UNFORESEEN FIELD CONDITIONS. THE PREPARER, OR THE ASSIGNED DESIGNEE, SHALL APPROVE ALL FIELD ADJUSTMENTS TO THE EROSION AND SEDIMENT CONTROL DRAWINGS (ESCDS).
5. IF LAYDOWN OR STAGING AREAS ARE TO BE RELOCATED WITH THE CURRENT ACTIVE CONSTRUCTION ACTIVITIES, CONTRACTOR SHALL ENSURE ALL AREAS ARE EQUIPPED WITH EFFECTIVE AND APPLICABLE BMPS.
6. ALL STOCKPILES AND AREAS OF EXPOSED SOIL MUST BE COVERED WITH GEOTEXTILES AND MATS, PLASTIC, OR AN EQUIVALENT MATERIAL, PRIOR TO RAIN.
7. A STOCKPILE OF GRAVEL BAGS WILL BE STAGED TO BE DEPLOYED AS PERIMETER CONTROLS PRIOR TO AND DURING RAIN EVENTS ALONG THE DISTURBED ACCESS ROADS AND CONCENTRATED FLOW PATHS.
8. REMOVE ALL EQUIPMENT, MATERIALS, AND STOCKPILES FROM THE CHANNEL WHENEVER THERE IS 20% OR GREATER PROBABILITY OF RAIN IN THE FORECAST.
9. A DIVERSION BERM CONSISTING OF SANDBAGS AND A PIPE IS TO BE INSTALLED ANYWHERE THERE IS ACTIVE CONSTRUCTION AT THE INVERT OF THE CHANNEL.

SCALE 1"=10'

10 5 0 10 20

SCALE: 1"=10'

COUNTY OF ORANGE CALIFORNIA

| MARK | DESCRIPTION | DATE | APPR. |
|---|---|---|---|
| | | | |

PREPARED UNDER THE RESPONSIBLE CHARGE OF:
ANDREW JOSEPH JOHN SIDOR, P.E.
02/28/22
DATE

REGISTERED PROFESSIONAL ENGINEER ANDREW JOSEPH JOHN SIDOR No. C80075 CIVIL STATE OF CALIFORNIA

DESIGNED BY: AP
DRAWN BY: AP
CHECKED BY: AS
DRAWING NUMBER:
FILE NAME: XXXXXXXXXXXXXXXXXX
PLOT DATE: 02/28/2022
SCALE: AS SHOWN

County of Orange
OC Public Works

PREPARED BY:
Michael Baker INTERNATIONAL
5 Hutton Centre Drive, Suite 500, Santa Ana, CA 92707
Phone: (949) 472-3505 - MBAKERINTL.COM

LAGUNA CANYON CHANNEL REPLACEMENT
**OCFCD FACILITY NO. I02**

EROSION AND SEDIMENT CONTROL - SHEET 2

SHEET
40
SHEET 40 OF 41

REPLACEMENT OF LAGUNA CANYON CHANNEL OCFCD FACILITY No. I02

H:\PDATA\180154\PROJECT INFO\WATER_QUALITY\ESCP\ESCDS\CADD\LAGUNA CANYON – ESCP MAP.DWG CHONG, CANDICE 3/10/2022 5:18 PM



EXHIBIT B

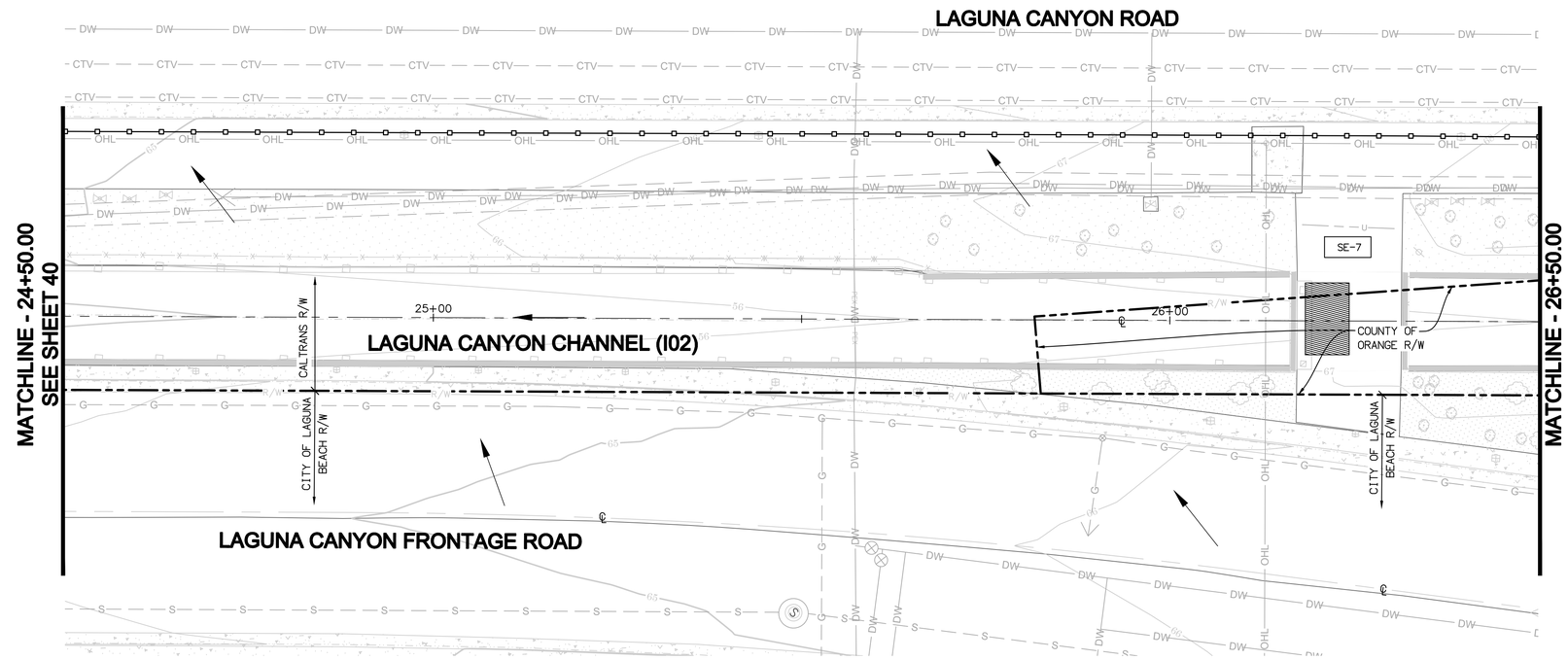


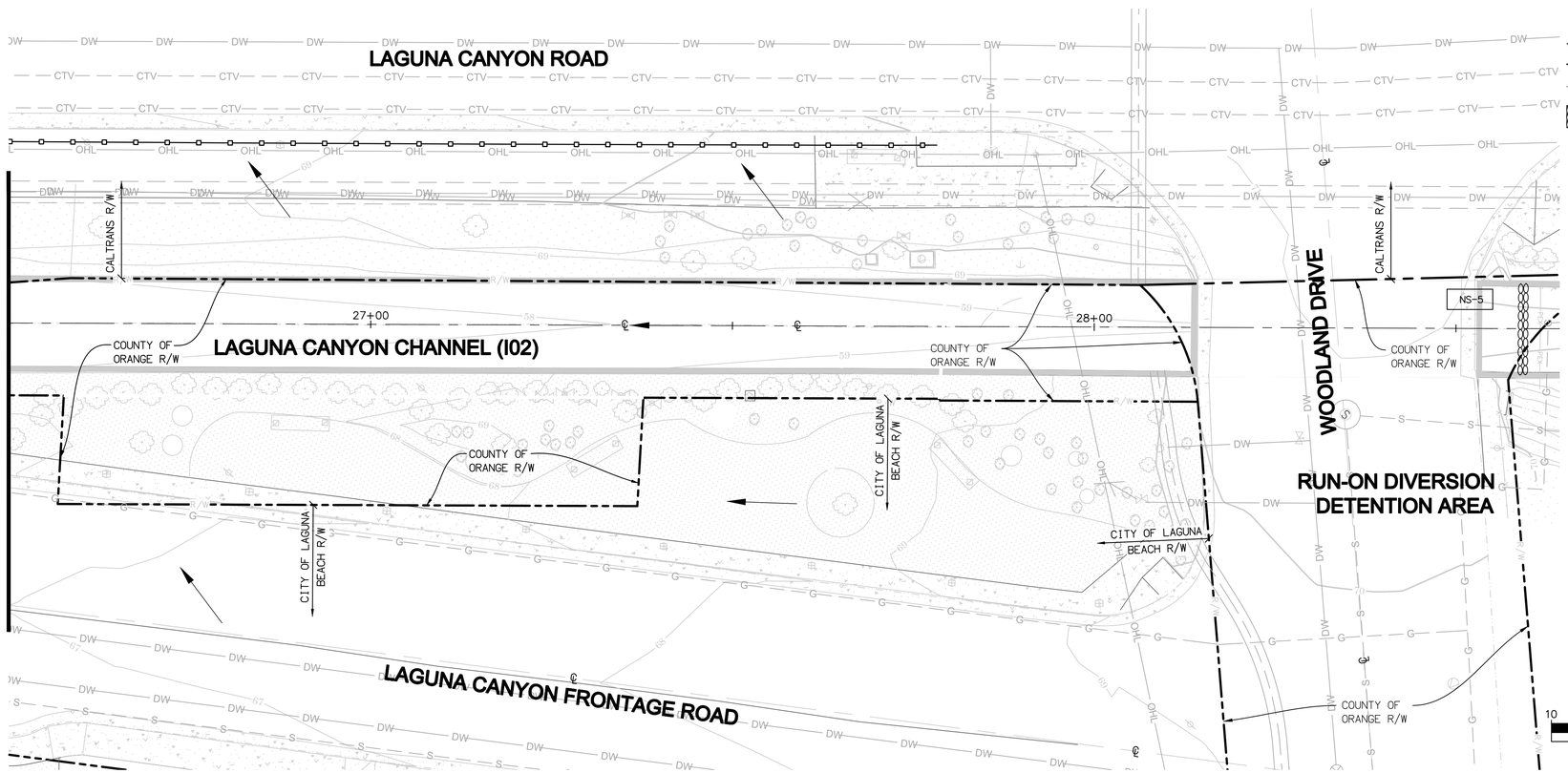


NOTES:

1. STAGING, MATERIAL & EQUIPMENT, & TRAILER LOCATION AREAS WILL BE SELECTED DURING CONSTRUCTION. STABILIZED CONSTRUCTION ENTRANCES, TRASH CONTAINERS, PORTABLE TOILETS, AND STOCKPILES WILL BE ADDED TO THE SITE MAP DURING CONSTRUCTION. INSTALL PERIMETER SEDIMENT CONTROLS AROUND STORAGE AREAS.
2. STABLIZED CONSTRUCTION ENTRANCES/ EXITS (TC-1) ARE SHOWN AT APPROXIMATE LOCATIONS DUE TO THE SCALE OF THE MAP. TC-1 SHALL BE INSTALLED AT ALL MAINTENANCE ACCESS ROAD ENTRANCES/ EXITS THAT WILL BE USED ADJACENT TO A PUBLIC ROAD.
3. CONTRACTOR SHALL MONITOR ENTRANCE AND EXIT LOCATIONS TO THE PROJECT SITE AND PROVIDE BMP CONTROLS IN AND OUT OF THE PROJECT SITE WHERE APPLICABLE.
4. BMP LOCATIONS ARE APPROXIMATE. DUE TO THE CHANGING NATURE AND LOCATIONS OF CONSTRUCTION, MINOR ADJUSTMENTS TO BMP PLACEMENT AND SEQUENCE OF BMP IMPLEMENTATION ARE ANTICIPATED IN THE FIELD DURING CONSTRUCTION DUE TO CONSTRAINTS ASSOCIATED WITH CONSTRUCTION ACTIVITIES, SCHEDULING AND UNFORESEEN FIELD CONDITIONS. THE PREPARER, OR THE ASSIGNED DESIGNEE, SHALL APPROVE ALL FIELD ADJUSTMENTS TO THE EROSION AND SEDIMENT CONTROL DRAWINGS (ESCDS).
5. IF LAYDOWN OR STAGING AREAS ARE TO BE RELOCATED WITH THE CURRENT ACTIVE CONSTRUCTION ACTIVITIES, CONTRACTOR SHALL ENSURE ALL AREAS ARE EQUIPPED WITH EFFECTIVE AND APPLICABLE BMPS.
6. ALL STOCKPILES AND AREAS OF EXPOSED SOIL MUST BE COVERED WITH GEOTEXTILES AND MATS, PLASTIC, OR AN EQUIVALENT MATERIAL, PRIOR TO RAIN.
7. A STOCKPILE OF GRAVEL BAGS WILL BE STAGED TO BE DEPLOYED AS PERIMETER CONTROLS PRIOR TO AND DURING RAIN EVENTS ALONG THE DISTURBED ACCESS ROADS AND CONCENTRATED FLOW PATHS.
8. REMOVE ALL EQUIPMENT, MATERIALS, AND STOCKPILES FROM THE CHANNEL WHENEVER THERE IS 20% OR GREATER PROBABILITY OF RAIN IN THE FORECAST.
9. A DIVERSION BERM CONSISTING OF SANDBAGS AND A PIPE IS TO BE INSTALLED ANYWHERE THERE IS ACTIVE CONSTRUCTION AT THE INVERT OF THE CHANNEL.

## BEST MANAGEMENT PRACTICES (BMPs)

### LEGEND

- DIRECTION OF FLOWS
- PROJECT AREA
- SILT FENCE (SE-1)
- GRAVEL BAG BERM (SE-6)
- SAND BAG BARRIER (SE-8)
- STABILIZED CONSTRUCTION ENTRANCE (TC-1)
- * T — TRAILER
- * CW — CONCRETE WASHOUT
- * EM — VEHICLE & EQUIPMENT MAINTENANCE/STAGING AREA
- * M1 — MATERIAL STORAGE
- * ST — STOCKPILE AREA
- * W — CONSTRUCTION WASTE STORAGE
- * PT — PORTABLE TOILET
- * LOCATION TO BE SHOWN BY CONTRACTOR DURING CONSTRUCTION

TYPICAL AT EACH CONSTRUCTION WORK AREA

| | |
|---|---|
| EC-1 | SCHEDULING |
| EC-2 | PRESERVATION OF EXISTING VEGETATION |
| NS-1 | WATER CONSERVATION PRACTICES |
| NS-2 | DEWATERING OPERATIONS |
| NS-5 | CLEAR WATER DIVERSION |
| NS-6 | ILLICIT CONNECTION/DISCHARGE |
| NS-9 | VEHICLE AND EQUIPMENT FUELING |
| NS-10 | VEHICLE AND EQUIPMENT MAINTENANCE |
| NS-12 | CONCRETE CURING |
| WM-1 | MATERIAL DELIVERY AND STORAGE |
| WM-2 | MATERIAL USE |
| WM-3 | STOCKPILE MANAGEMENT |
| WM-4 | SPILL PREVENTION AND CONTROL |
| WM-5 | SOLID WASTE MANAGEMENT |
| WM-6 | HAZARDOUS WASTE MANAGEMENT |
| WM-8 | CONCRETE WASTE MANAGEMENT |
| WM-9 | SANITARY/SEPTIC WASTE MANAGEMENT |

ACTIVE CONSTRUCTION BMPs

| | |
|---|---|
| EC-7 | GEOTEXTILES AND MATS |
| SE-1 | SILT FENCE |
| SE-6 | GRAVEL BAG BERM |
| SE-8 | SAND BAG BARRIER |
| SE-7 | STREET SWEEPING AND VACUUMING |
| WE-1 | WIND EROSION CONTROL |
| TC-1 | STABILIZED CONSTRUCTION ENTRANCE/EXIT |

SCALE 1"=10'

10 5 0 10 20
SCALE: 1"=10'

COUNTY OF ORANGE CALIFORNIA

| MARK | DESCRIPTION | DATE | APPR. |
|---|---|---|---|
| | | | |

PREPARED UNDER THE RESPONSIBLE CHARGE OF:
ANDREW JOSEPH JOHN SIDOR, P.E.
02/28/22
DATE

REGISTERED PROFESSIONAL ENGINEER ANDREW JOSEPH JOHN SIDOR No. C80015 CIVIL STATE OF CALIFORNIA

DESIGNED BY: AP
DRAWN BY: AP
CHECKED BY: AS
DRAWING NUMBER:
FILE NAME: XXXXXXXXXXXXXXXXXXXX
PLOT DATE: 02/28/2022
SCALE: AS SHOWN

County of Orange
OC Public Works

PREPARED BY:
Michael Baker INTERNATIONAL
5 Hutton Centre Drive, Suite 500, Santa Ana, CA 92707
Phone: (949) 472-3505 · MBAKERINTL.COM

LAGUNA CANYON CHANNEL REPLACEMENT
**OCFCD FACILITY NO. I02**

EROSION AND SEDIMENT CONTROL - SHEET 3

SHEET
41
SHEET 41 OF 41

REPLACEMENT OF LAGUNA CANYON CHANNEL OCFCD FACILITY No. I02

H:\PDATA\180154\PROJECT INFO\WATER_QUALITY\ESCP\ESCDS\CADD\LAGUNA CANYON - ESCP MAP.DWG CHONG, CANDICE 3/10/2022 5:18 PM



EXHIBIT B

# Attachment B

# Laguna Canyon Channel Replacement Project

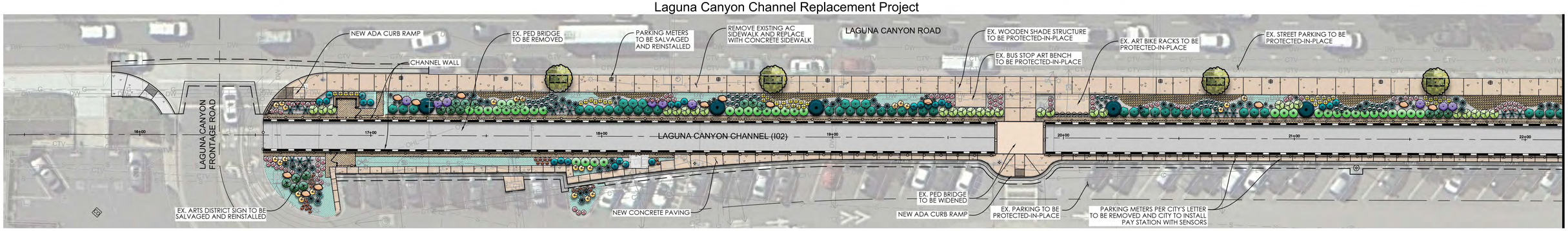


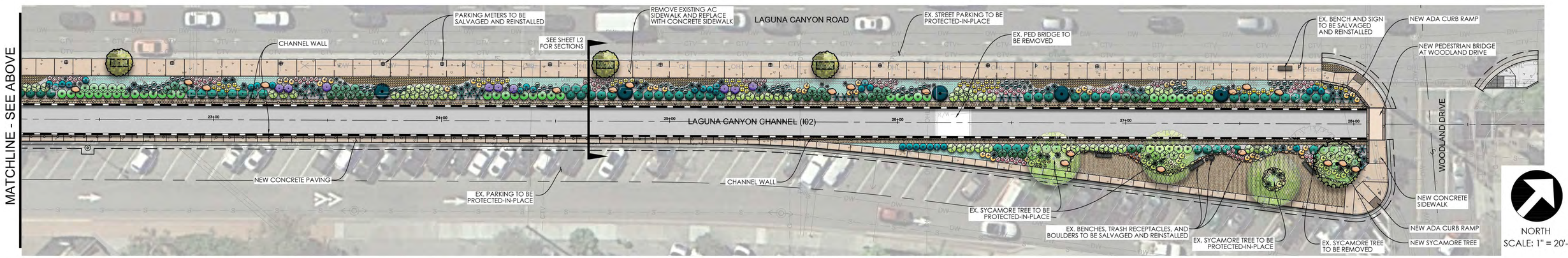


## PLANT LEGEND

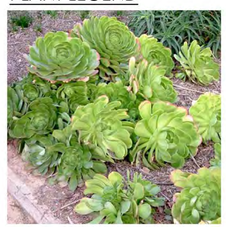
AEONIUM ARBOREUM
AEONIUM

AGAVE ATTENUATA
FOX TAIL AGAVE

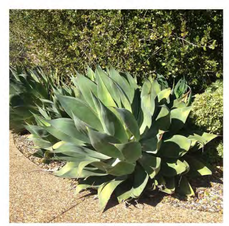
AGAVE 'BLUE FLAME'
BLUE FLAME AGAVE

ALOE BARBERAE
TREE ALOE

ALOE STRIATA
CORAL ALOE

BACCHARIS 'TWIN PEAKS'
DWARF COYOTE BRUSH

CALANDRINIA SPECTABILIS
ROCK PURSLANE

CAREX DIVULSA
EUROPEAN GRAY SEDGE

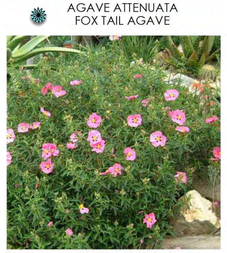
CISTUS PURPUREUS
ORCHID ROCKROSE

DIANELLA VARIEGATA
VARIEGATED FLAX LILY

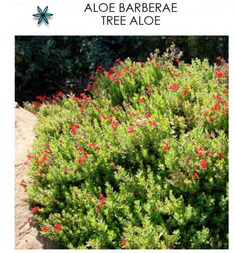
GALVEZIA SPECIOSA
ISLAND BUSH SNAPDRAGON

JUNCUS PATENS
CALIFORNIA GREY RUSH

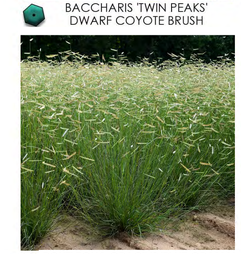
**BOUTLEOUA GRACILIS 'BLUE GRAMA'**
**BLUE GRAMA**

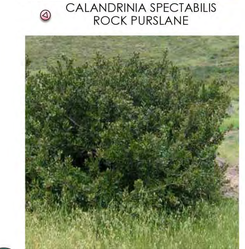
RHUS INTEGRIFOLIA
LEMONADE BERRY

**PHLOMIS FRUTICOSA**
**JERUSALEM SAGE**

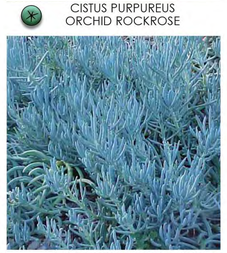
SENECIO MANDRALISCAE
BLUE CHALK STICKS

CERCIS OCCIDENTALIS
WESTERN REDBUD

PLATANUS RACEMOSA
CALIFORNIA SYCAMORE

ROCK COBBLE

DECOMPOSED GRANITE

BOULDERS

LANDSCAPE CONCEPT PLAN

Michael Baker INTERNATIONAL
5 Hutton Centre Drive, Suite 500
Santa Ana, CA 92707
Phone: (949) 472-3505
MBAKERINTL.COM

ORANGE COUNTY PublicWorks

ORANGE COUNTY FLOOD CONTROL DISTRICT

LAGUNA CANYON CHANNEL REPLACEMENT PROJECT

L1

MAY 2022

EXHIBIT B

# Attachment C

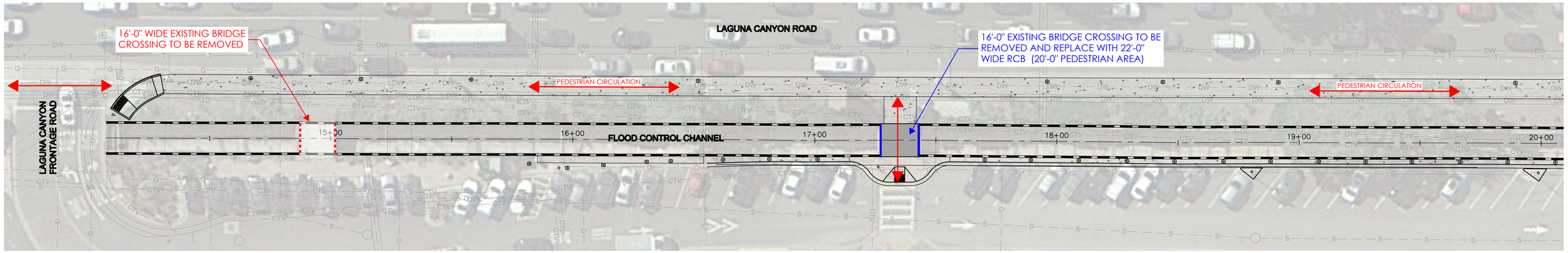


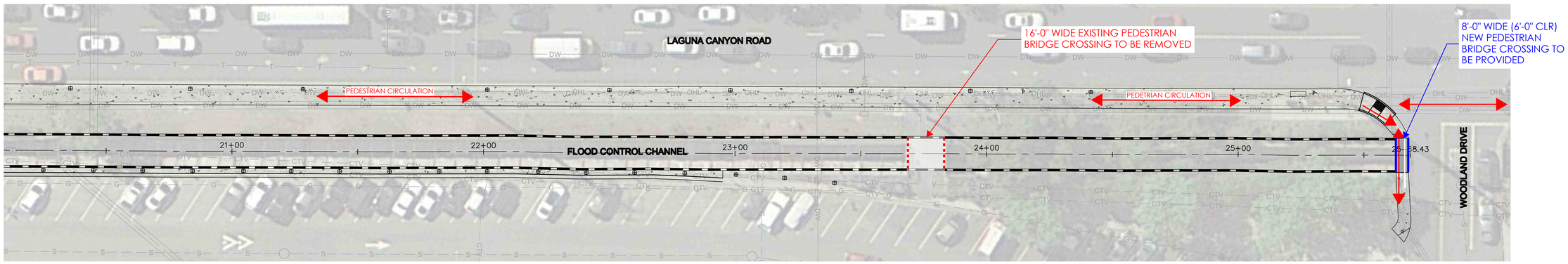


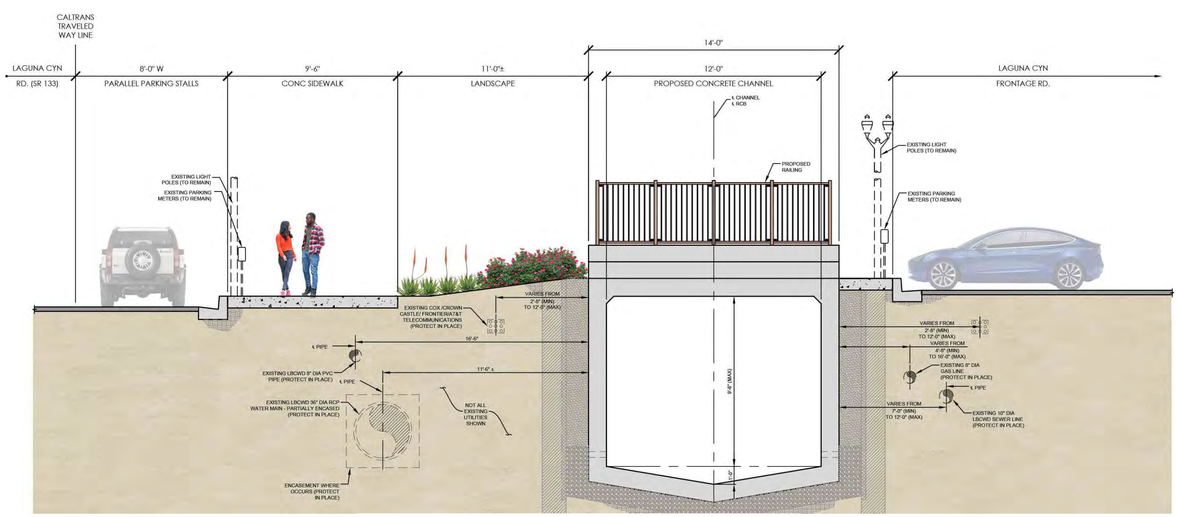


PROPOSED CHANNEL WITH PEDESTRIAN BRIDGE

NOT TO SCALE

(LOOKING UPSTREAM)

PROPOSED CHANNEL WITH PEDESTRIAN BRIDGE

NOT TO SCALE

(LOOKING UPSTREAM)

NORTH

SCALE: 1" = 20'-0"

PROPOSED PEDESTRIAN CROSSINGS - CONCEPT PLAN

Michael Baker INTERNATIONAL
5 Hutton Centre Drive, Suite 500
Santa Ana, CA 92707
Phone: (949) 472-3505
MBAKERINTL.COM

ORANGE COUNTY PublicWorks

ORANGE COUNTY FLOOD CONTROL DISTRICT

LAGUNA CANYON CHANNEL REPLACEMENT PROJECT

D1

MAY 2021

EXHIBIT B

# Attachment D

# TRAFFIC CONTROL CONCEPT-OVERVIEW

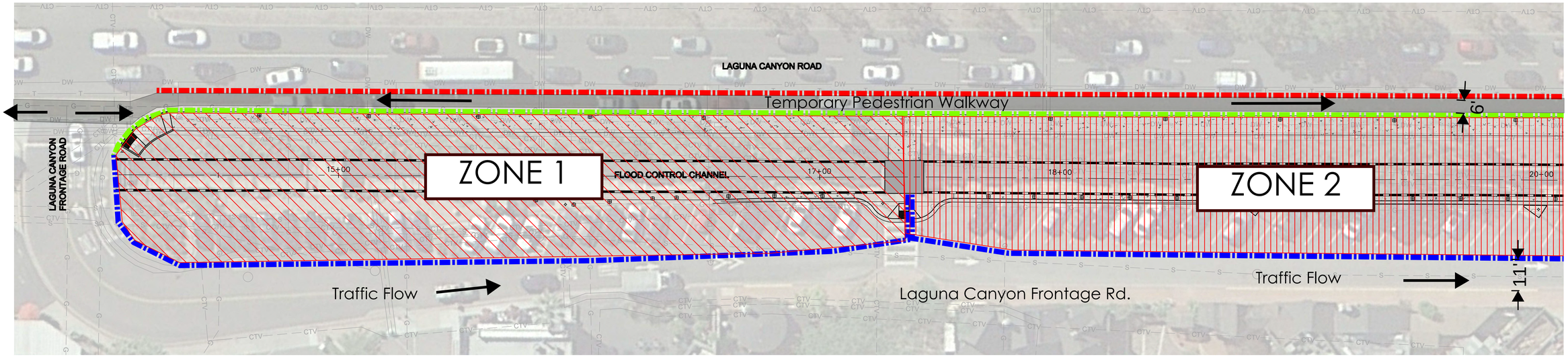


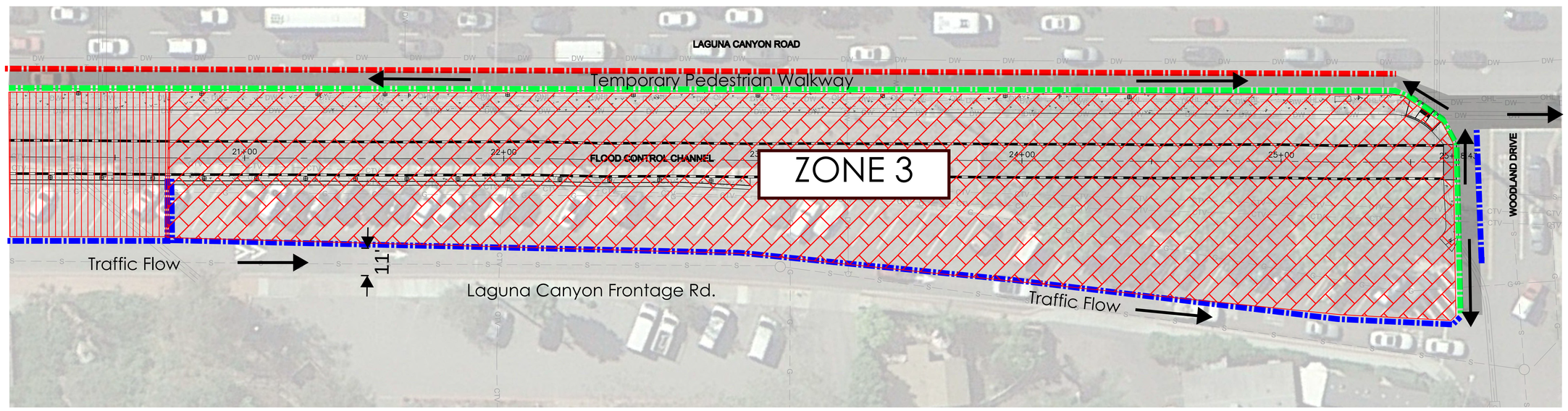


Zone # Construction Area

Temporary K-rail in all zones will be placed throughout the project duration

Temporary Chainlink fence with Screen in all zones will be placed throughout the project duration

Temporary Water Barrier with Screen will be placed per work zone

NORTH
SCALE: 1" = 20'-0"

OVERALL PROJECT CONSTRUCTION PHASING - CONCEPT PLAN

Michael Baker INTERNATIONAL
5 Hutton Centre Drive, Suite 500
Santa Ana, CA 92707
Phone: (949) 472-3505
MBAKERINTL.COM

ORANGE COUNTY PublicWorks

ORANGE COUNTY FLOOD CONTROL DISTRICT
LAGUNA CANYON CHANNEL REPLACEMENT PROJECT

C1
MAY 2021
EXHIBIT B

# TRAFFIC CONTROL CONCEPT-ZONE 1

K-rail Opening for construction access. (Approx. 60 LF opening with Delineator )
*There will be a flagger to stop pedestrian for equipment accesses to the construction site

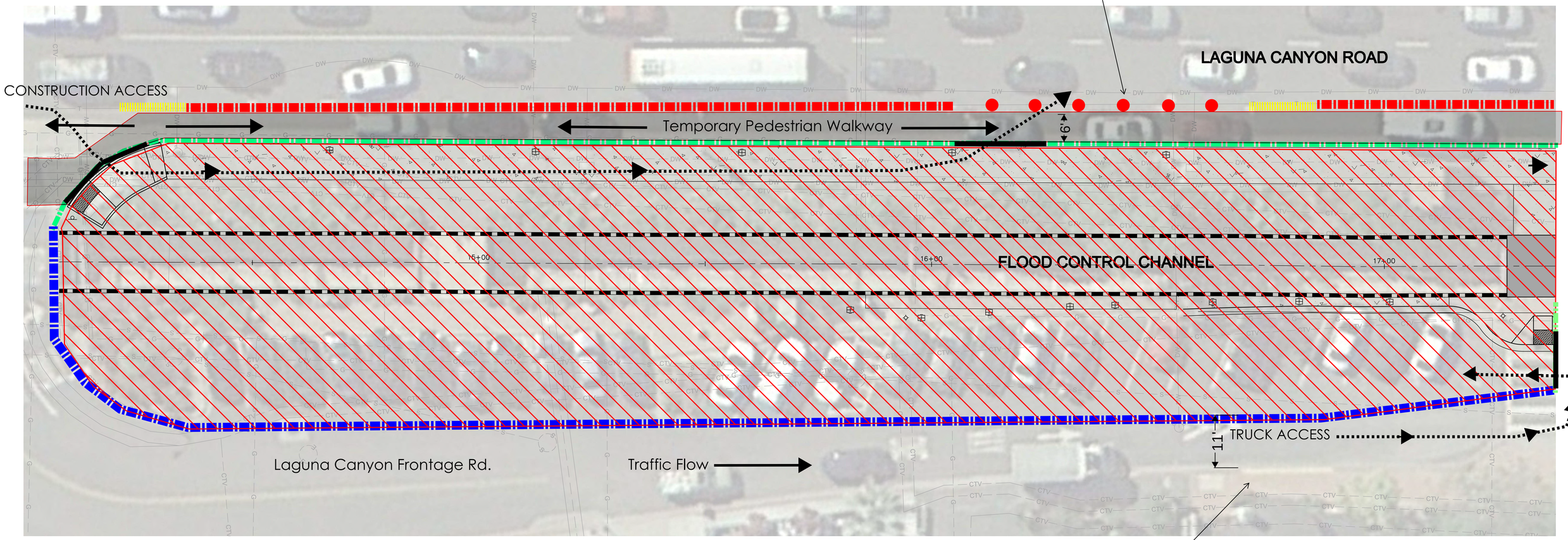


Existing Sidewalk to Remain Open (typ.)

| | EXISTING PARKING SPOTS | PARKING SPOTS DURING CONSTRUCTION |
|---|---|---|
| LAGUNA CYN. RD. | 38 | 0 |
| LAGUNA FRONTAGE RD. | 107 | 71 ** |

** INCLUDES 10 PARKING SPOTS FROM ZONE 2 FOR TRUCK ACCESS

- Zone 1 Construction Area
- Temporary K-rail
- Temporary Chainlink Fence with Screen
- Temporary Water Barrier with screen
- Temporary Crash Cushion
- Delineator
- Temporary Chainlink Fence Gate for construction access

NORTH
SCALE: 1" = 20'-0"

CONSTRUCTION PHASING / TRAFFIC CONTROL (PHASE 1 OF 3) - CONCEPT PLAN

Michael Baker INTERNATIONAL
5 Hutton Centre Drive, Suite 500
Santa Ana, CA 92707
Phone: (949) 472-3505
MBAKERINTL.COM

ORANGE COUNTY PublicWorks

ORANGE COUNTY FLOOD CONTROL DISTRICT
LAGUNA CANYON CHANNEL REPLACEMENT PROJECT

C2

EXHIBIT B

MAY 2021

# TRAFFIC CONTROL CONCEPT-ZONE 2

K-rail Opening for construction access. (Approx. 60 LF opening with Delineator )
*There will be a flagger to stop pedestrian for equipment accesses to the construction site

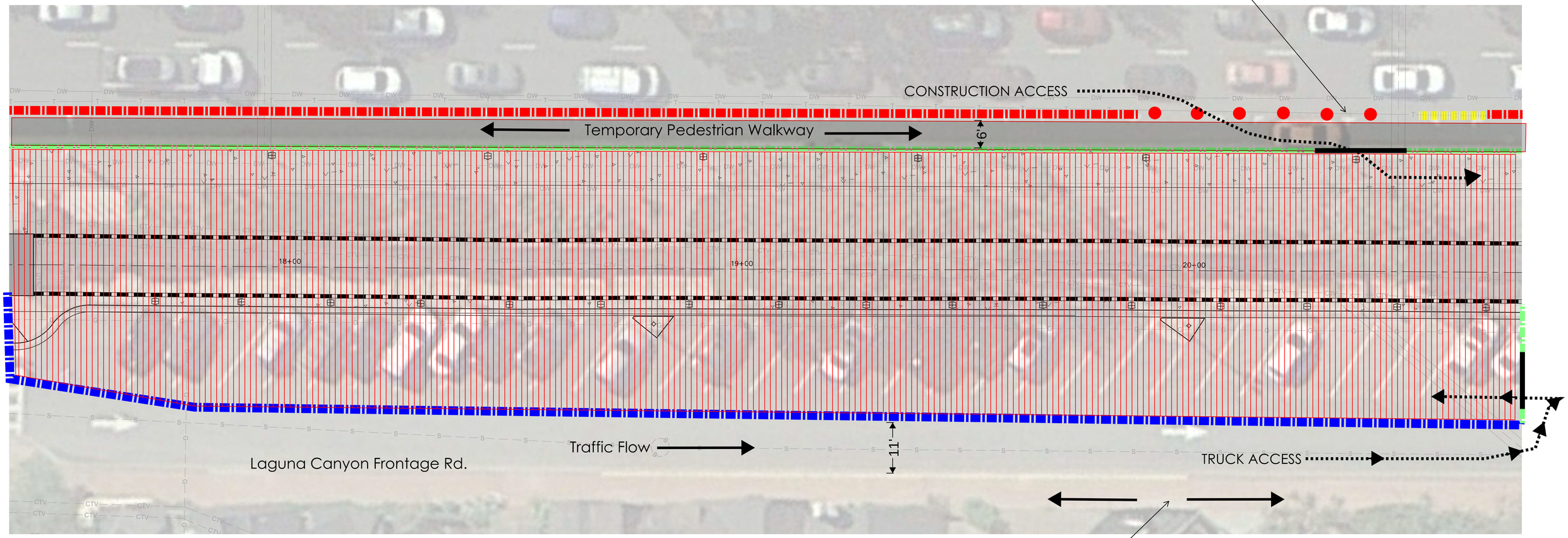


Existing Sidewalk to Remain Open (typ.)

Zone 2 Construction Area

Temporary K-rail

Temporary Cainlink Fence with Screen

Temporary Water Barrier with Screen

Temporary Crash Cushion

Delineator

Temporary Chainlink Fence Gate for Construction Access

| | EXISTING PARKING SPOTS | PARKING SPOTS DURING CONSTRUCTION |
|---|---|---|
| LAGUNA CYN. RD. | 38 | 0 |
| LAGUNA FRONTAGE RD. | 107 | 63 ** |

** INCLUDES 10 PARKING SPOTS FROM ZONE 3 FOR TRUCK ACCESS

NORTH
SCALE: 1" = 20'-0"

CONSTRUCTION PHASING / TRAFFIC CONTROL (PHASE 2 OF 3) - CONCEPT PLAN

Michael Baker INTERNATIONAL
5 Hutton Centre Drive, Suite 500
Santa Ana, CA 92707
Phone: (949) 472-3505
MBAKERINTL.COM

ORANGE COUNTY PublicWorks

ORANGE COUNTY FLOOD CONTROL DISTRICT

LAGUNA CANYON CHANNEL REPLACEMENT PROJECT

C3

EXHIBIT B

# TRAFFIC CONTROL CONCEPT-ZONE 3

| | EXISTING PARKING SPOTS | PARKING SPOTS DURING CONSTRUCTION |
|---|---|---|
| LAGUNA CYN. RD. | 38 | 0 |
| LAGUNA FRONTAGE RD. | 107 | 78 |

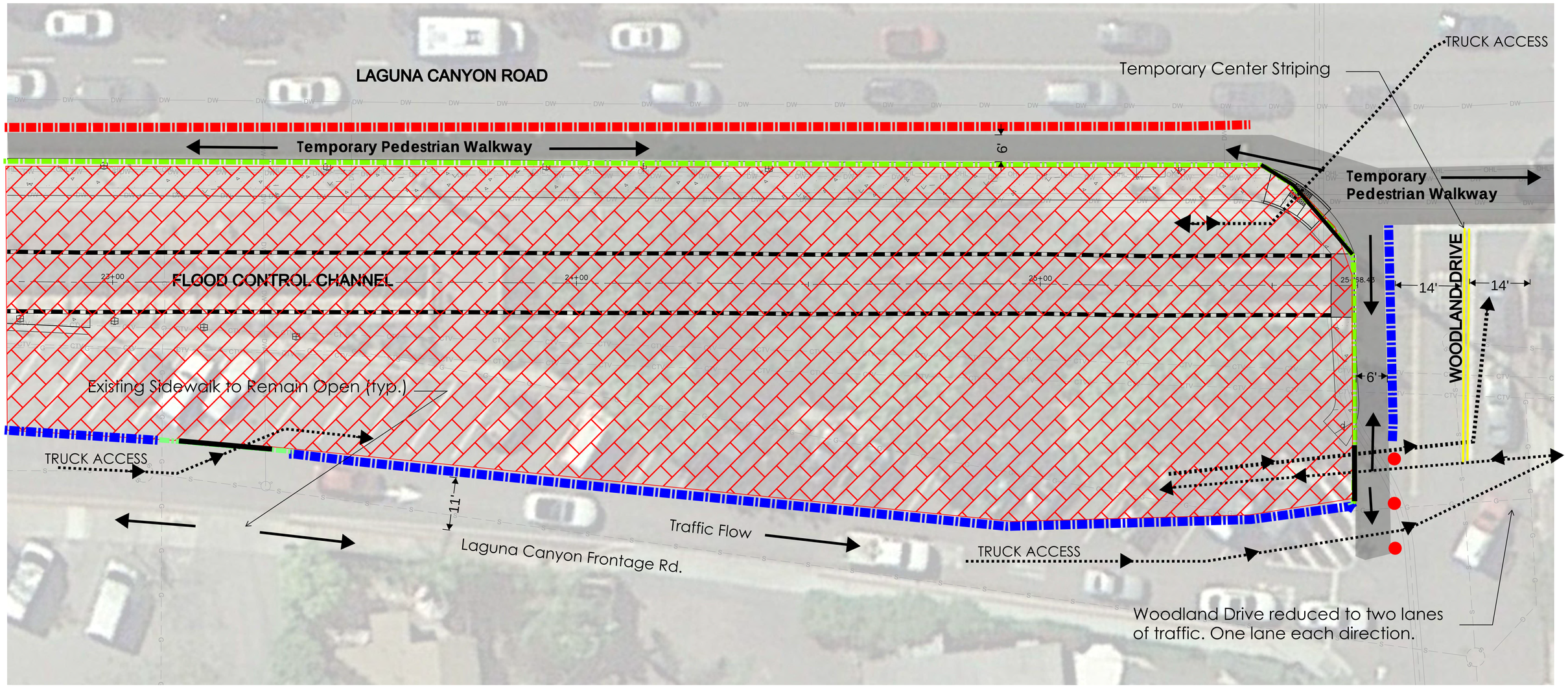


Zone 3 Construction Area

Temporary Cainlink Fence with Screen

Temporary Chainlink Fence Gate for Construction Access

Temporary K-rail

Temporary Water Barrier with Screen

Delineator

NORTH
SCALE: 1" = 20'-0"

CONSTRUCTION PHASING / TRAFFIC CONTROL (PHASE 3 OF 3) - CONCEPT PLAN

Michael Baker INTERNATIONAL
5 Hutton Centre Drive, Suite 500
Santa Ana, CA 92707
Phone: (949) 472-3505
MBAKERINTL.COM

ORANGE COUNTY PublicWorks

ORANGE COUNTY FLOOD CONTROL DISTRICT

LAGUNA CANYON CHANNEL REPLACEMENT PROJECT

C4

MAY 2021

EXHIBIT B

# TRAFFIC CONTROL CONCEPT

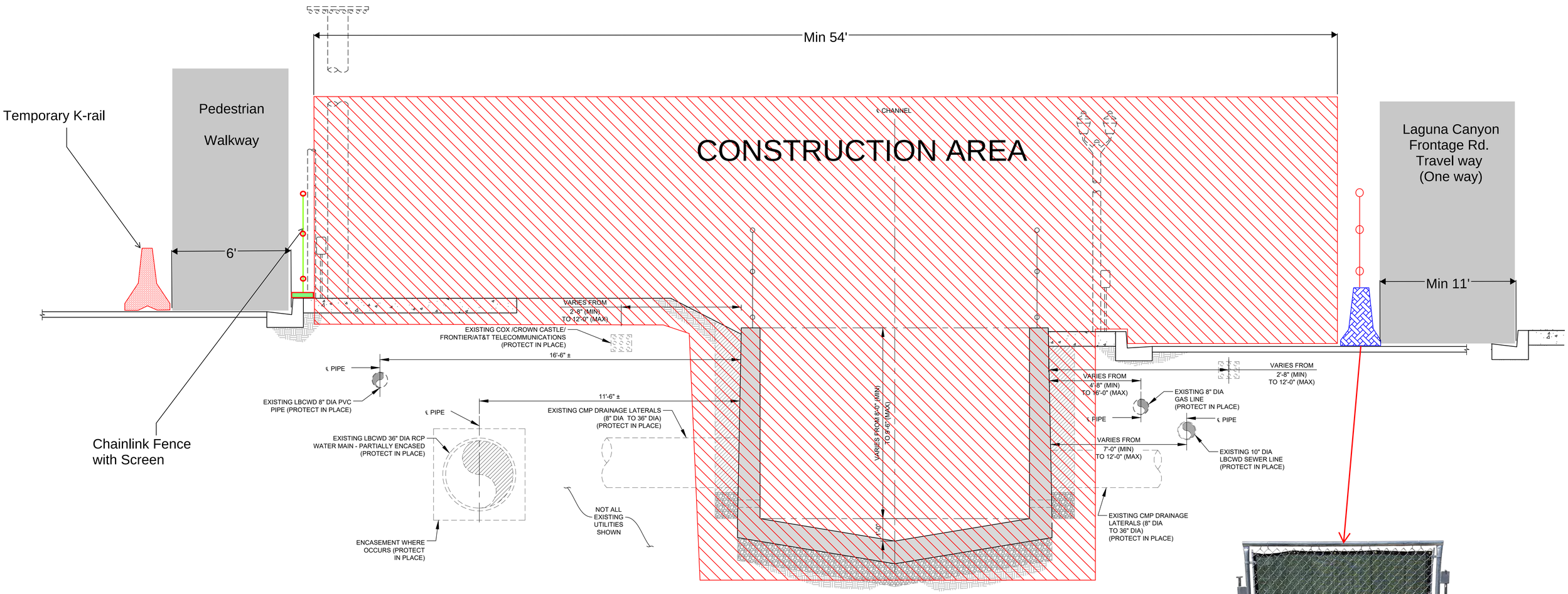


PROPOSED CHANNEL - TYPICAL SECTION

NOT TO SCALE

(LOOKING UPSTREAM)

*Similar type of water barricade and screen will be used

PEDESTRIAN DETOURING DURING CONSTRUCTION - CHANNEL TYPICAL SECTION

Michael Baker INTERNATIONAL
5 Hutton Centre Drive,
Suite 500
Santa Ana, CA 92707
Phone: (949) 472-3505
MBAKERINTL.COM

ORANGE COUNTY PublicWorks

ORANGE COUNTY FLOOD CONTROL DISTRICT

LAGUNA CANYON CHANNEL
REPLACEMENT PROJECT

C5

MAY 2021



EXHIBIT B

# Attachment E

PROJECT RENDERING

Michael Baker INTERNATIONAL
5 Hutton Centre Drive,
Suite 500
Santa Ana, CA 92707
Phone: (949) 472-3505
MBAKERINTL.COM

ORANGE COUNTY PublicWorks

ORANGE COUNTY FLOOD CONTROL DISTRICT

LAGUNA CANYON CHANNEL
REPLACEMENT PROJECT



EXHIBIT B

# Attachment F

# County of Orange
## Laguna Canyon Channel
### Tree Assessments (15)

SUBMITTED TO:

MR. KRIS GREEN
Maintenance Inspector Specialist
Annual Contracts Inspection
County of Orange

Prepared By:
Rebecca Mejia
ISA Certified Arborist, WE 2355A
ISA Qualified Tree Risk Assessor (TRAQ)
Consulting Arborist, WCA Inc.
West Coast Arborists, Inc.

August 13, 2019

*Tree Care Professionals Serving Communities Who Care About Trees* www.WCAINC.com

August 13, 2019

County of Orange
**ATTN: Kris Green**
2301 N. Glassell Street
Orange, CA 92865

**RE: Laguna Canyon Channel: tree inspections (15)**
(MIR#: F354690)

Mr. Green,

Pursuant to your request this report has been prepared in order to present the results from my assessment of fifteen (15) trees located adjacent to the Laguna Canyon Channel. The site was visited on July 26, 2019 and all comments and recommendations that follow are based on observations made while on site. Per the Work Order received from County of Orange staff, we were asked to provide the following details:

1. Species profile with general information regarding root structure detail
2. General health and condition of each tree
3. Offset distance of each tree form the channel wall
4. Likelihood of plant failure and impact to channel
5. Detail whether each tree can be left in place and not negatively impact the channel structure. If tree(s) can remain in place, offer measures to ensure they will not negatively impact channel and will allow for visual inspection and repairs as needed.
6. For the 6 trees at the western portion of the channel (downstream of Woodland), include information that describes the viability of these trees surviving construction efforts to replace the channel walls within the vicinity.

For ease of information presentation, all observations and recommendations per the requirements set forth above are provided in the two tables found on pages 2 and 4. The requested species profiles and general information with regards to root structure and development will be detailed below. Photographs have been taken of each tree, but only a representative few are included within the context of this report simply to detail some of the conditions found (see pages 5-7); if necessary, additional images can be made available upon request.

**Background:** In February 2019, a portion of the channel wall collapsed during the course of an extremely heavy rain event. This failure revealed a large mass of roots running parallel to the channel wall. An engineering assessment was conducted on the condition of the channel walls and it was determined that root expansion from the adjacent pine trees have acted to weaken sections of the wall located south of Woodland Drive.



West Coast Arborists, Inc.
2200 E. Via Burton Street, Anaheim, CA 92806 714.991.1900 800.521.3714 Fax 714.956.3745

**Table 1: GENERAL OBSERVATIONS:**

| Tree # | DSH (inches) | Height (feet) | Spread (feet) | Offset* (inches) | Health* | Likelihood of failure & impact | Comments/Observations |
|---|---|---|---|---|---|---|---|
| 1 | 23 | 20 | 40 | 77 | Good | Moderate | Low hanging branches overhanging sidewalk & channel; overhead utility lines. Root encroachment along the channel wall. |
| 2 | 31 | 40 | 40 | 64 | Good | Low | Slight lean towards channel; overhead utility lines. Root encroachment visible along the channel wall. |
| 3 | 20 | 20 | 20 | 55 | Good | Low | Small stature tree, good health; overhead utility lines. Root encroachment visible along the channel wall. |
| 4 | 20 | 20 | 20 | 52 | Fair | Low | Thinning canopy, smaller stature tree; overhead utility lines. Root encroachment visible along the channel wall. |
| 5 | 34 | 25 | 50 | 57 | Good | Moderate | Slight lean, canopy heavier toward channel; overhead utility lines. Root encroachment visible along the channel wall. |
| 6 | 24 | 40 | 35 | 57 | Good | Low | Lateral limbs overhanging channel & roadway; overhead utility lines. Root encroachment visible along the channel wall. |
| 7 | 24+ | 40 | 20 | 5 feet | Fair | Moderate | Lean, but trunk base is roughly 5-6 feet from channel wall. Root encroachment visible along the channel wall. |
| 8 | 14 | 30 | 15 | 0 | Poor | High | Lean over the channel; base trunk base at channel wall. Root encroachment visible along the channel wall. |
| 9 | 25 | 50 | 20 | 0 | Fair | High | Double stemmed, trunk base at channel wall. Root encroachment along wall. |
| 10 | 24 | 50 | 20 | 0 | Poor | High | Poor structure, weak main crotch, topping cuts; trunk base is in direct contact with the channel wall. Root encroachment visible at the channel wall. |
| 11 | 15 | 45 | 20 | 0 | Poor | High | Weak branch unions, tree base at channel wall. Root encroachment along wall. |
| 12 | 9 | 40 | 5 | 0 | Poor | High | Dieback & decline, tree base at channel wall; root encroachment along wall. |
| 13 | 47 | 60 | 40 | 18 | Fair | High | Double stemmed, weak base, lean, old topping cuts, less than 1.5 feet from channel wall. Root encroachment along the channel wall. |
| 14 | 25 | 60 | 40 | 18 | Fair | High | The trunk is leaning against the chain-link fence, with a high % of canopy overhanging the channel. Trunk base is in direct contact with the channel wall. Root encroachment along the channel wall. |
| 15 | 30+ | 60 | 30 | 0 | Fair | High | Slight lean, with high % of canopy overhanging channel; trunk base is in direct contact with the channel wall. Root encroachment along the channel wall. |

*Offset=distance from back of channel wall to the trunk base, recorded in inches unless otherwise noted.
(if the offset distance is "0," the tree base or root flare is in contact with the back of the channel wall).

*Health:

*Good:* the plant is healthy and relatively free from pests, disease or stress; may display 10% or less crown dieback.

*Fair:* the plant is showing signs of stress, including dieback of twigs & small branches, canopy dieback of 10-40%.

*Poor:* the plant displays irreversible decline & dieback, canopy death of 60% or greater.

**GENERAL DISCUSSION:**

Species Profile:

- Aleppo Pine, *Pinus halepensis.* Native to southern Europe and Mediterranean regions of Asia Minor. Moderate to rapid growth rate to heights of 30-60 feet tall with an equal canopy spread. Symmetrical in youth but developing an oval, irregular form, with horizontal but asymmetrical branching with age. This pine variety is drought tolerant and is well adapted to most southern California landscapes; commonly used as a street parkway and garden/park tree. Longevity of 150+ years. Strong branch strength rating, moderately aggressive root system.
- California Sycamore, *Platanus racemosa.* Native riparian tree that tolerates wet to dry soils, extreme heat and high winds. This has a moderate growth rate reaching heights of 30-80 feet tall and 20-50 feet wide. Considered a moderately deep-rooted tree, it does produce surface roots which can sometimes result in heaved, cracked or similar hardscape damage. Variable in shape, can develop both upright or spreading forms, with an oval, rounded or umbrella shaped crown. Longevity



West Coast Arborists, Inc.
2200 E. Via Burton Street, Anaheim, CA 92806 714.991.1900 800.521.3714 Fax 714.956.3745

of 150+ years. Medium branch strength rating, moderately aggressive, strongly rooted structural root system.

- Sugar Gum, *Eucalyptus cladocalyx.* Native to southern Australia, tough drought tolerant tree with a moderate to fast growth rate when young; reaching heights of 45-90 feet tall and 45-75 feet wide. Develops a large, graceful upright form with an open crown and dense foliage concentrated at branch ends but with a sparsely foliated interior. Rough gray bark, peeling in sheets to reveal whitish or pinkish underbark. Requires ample growth space, constantly sheds leaf and bark litter. Longevity 80-100 years. Medium branch strength rating, moderately aggressive shallow surface roots.
- Silver Dollar Gum, *Eucalyptus polyanthemos.* Native to Australia, drought tolerant tree with a moderate to fast growth rate reaching heights of 30-70 feet tall and 15-45 feet wide. Develops an upright form often with a multiple or low branching trunk, large upright limbs with slender, twiggy outward branches drooping at the ends. Bark is grayish brown, mottled with age due to shedding large, flaky strips, some with slightly furrowed, thicker and darker at base. Longevity estimated at 60-90 years. Medium branch strength rating, moderately root damage potential.

Root growth basics: Tree roots, although primarily underground and not visible, comprise a large portion of a tree's mass and are essential to tree health and safety. Roots not only anchor the tree, providing stability but also absorb water and nutrients, providing the essential elements for tree growth and survival and act as the primary storage place for food (carbohydrates) produced by the tree. Roots of trees will often extend two to three times the radius of the canopy and do not stop at the dripline as commonly believed. Most plants concentrate the majority of their absorbing roots within the first 6-10 inches of soil and will develop in response to the size of the plant. The larger a plant is, the larger the roots will need to grow in order to support the tree.

Road, sidewalk, building or other similar construction and/or trenching activities are especially damaging to the roots of nearby trees. Trenching and construction equipment used around trees often injure a large portion of the existing tree roots. Without the support of the entire root system, the tree is structurally weakened. The probability of failure increases as a greater amount of the root system is cut or damaged. It is very difficult to predict the exact effect that root cutting may have on a particular tree, or when an effect will occur. A tree may fail a few months or many years following root injury, or it may never fail due to the root injury. Tree species vary in their ability to tolerate root disturbances and no two root systems are exactly alike; a tree with a deep, extensive root system will tolerate more disturbance than a neighboring tree with a poorly developed root system.

**SUMMARY:** Based on the current health and condition of the first six trees, located along Laguna Canyon Road (between Woodland Dr. and Laguna Canyon Road frontage), none currently have an elevated risk of a total failure into the channel. However there are



West Coast Arborists, Inc.
2200 E. Via Burton Street, Anaheim, CA 92806 714.991.1900 800.521.3714 Fax 714.956.3745

portions of their canopies that do overhang the channel; the two species identified have a strong or medium branch strength ratings and a failure is not very likely. However, the pines along this portion of the channel also sit within several feet of the channel and root growth can be seen along the wall. Although regular annual crown thinning and structural pruning would help maintain truncated forms and thereby help lessen the chance of a branch falling into the channel it does not address the root damage issue. The only way to prevent the risk of root encroachment along the wall would be a full tree removal.

Similar to the trees in the upper portion of the channel, there are a number of concerns with the gum trees located just north of Forest Avenue. Almost all are in poor health or condition and sit directly adjacent to the channel wall, with some having very noticeable leans and large portions of the canopies spanning over the channel itself. Gum trees are well known to have fairly poor root strength and any moderate disturbance within the critical root zone could act to destabilize the trees. Efforts to rebuild the channel wall in this area would most likely be quite disruptive to the trees as a whole. It is not believed that repairs can be made without severe impact to plant health and stability. Additionally, due to the aggressive nature of the tree roots and the high probability of continued damage to the channel wall, full tree removal is recommended.

**Table 2: Summary of mitigation recommendations:**

| Tree # | Species | Mitigation/Recommendations |
|---|---|---|
| 1 | Aleppo Pine | The tree part most likely to impact any portion of the channel are roots & the low hanging branches. Mitigate via annual pruning to limit canopy expansion; consider full tree removal due to conflicts resulting from root expansion. |
| 2 | Aleppo Pine | The tree part most likely to impact any portion of the channel are roots & the low hanging branches. Mitigate via annual pruning to limit canopy expansion; consider full tree removal due to conflicts resulting from root expansion. |
| 3 | Aleppo Pine | The tree part most likely to impact any portion of the channel are roots & the low hanging branches. Mitigate via annual pruning to limit canopy expansion; consider full tree removal due to conflicts resulting from root expansion. |
| 4 | Aleppo Pine | The tree part most likely to impact any portion of the channel are roots & the low hanging branches. Mitigate via annual pruning to limit canopy expansion; consider full tree removal due to conflicts resulting from root expansion. |
| 5 | Aleppo Pine | The tree part most likely to impact any portion of the channel are roots & the low hanging branches. Mitigate via annual pruning to limit canopy expansion; consider full tree removal due to conflicts resulting from root expansion. |
| 6 | California Sycamore | The tree part most likely to impact any portion of the channel are roots & the low hanging branches. Mitigate via annual pruning to limit canopy expansion; consider full tree removal due to conflicts resulting from root expansion. |
| 7 | Silver Dollar Gum | Replacement of the channel wall would most likely not impact plant health or stability. Viability of survival is good. Roots are most likey impacting drainage into the channel, consider removal due to ongoing root issues. |
| 8 | Sugar Gum | Tree stability would be adversely impacted by any efforts to replace the channel wall. Viability of survival is low if construction occurs within the CRZ*. Consider for removal due to conflicts resulting from root expansion. |
| 9 | Sugar Gum | Tree stability would be adversely impacted by any efforts to replace the channel wall. Viability of survival is low if construction occurs within the CRZ*. Consider for removal due to conflicts resulting from root expansion. |
| 10 | Sugar Gum | Tree stability would be adversely impacted by any efforts to replace the channel wall. Viability of survival is low if construction occurs within the CRZ*. Consider for removal due to conflicts resulting from root expansion. |
| 11 | Sugar Gum | Tree stability would be adversely impacted by any efforts to replace the channel wall. Viability of survival is low if construction occurs within the CRZ*. Consider for removal due to conflicts resulting from root expansion. |
| 12 | Sugar Gum | Tree stability would be adversely impacted by any efforts to replace the channel wall. Viability of survival is low if construction occurs within the CRZ*. Consider for removal due to conflicts resulting from root expansion. |
| 13 | Sugar Gum | Tree stability would be adversely impacted by any efforts to replace the channel wall. Viability of survival is low if construction occurs within the CRZ*. Consider for removal due to conflicts resulting from root expansion. |
| 14 | Sugar Gum | Tree stability would be adversely impacted by any efforts to replace the channel wall. Viability of survival is low if construction occurs within the CRZ*. Consider for removal due to conflicts resulting from root expansion. |
| 15 | Sugar Gum | Tree stability would be adversely impacted by any efforts to replace the channel wall. Viability of survival is low if construction occurs within the CRZ*. Consider for removal due to conflicts resulting from root expansion. |

*CRZ=Critical Root Zone: Critical Root Zone (CRZ) is the area of soil extending out from the tree trunk where roots are required for plant health & stability are located. This area can also be defined the "dripline" or as a circle with a minimum radius of 1' for every 1" in trunk diameter at 4.5" above ground.



West Coast Arborists, Inc.
2200 E. Via Burton Street, Anaheim, CA 92806 714.991.1900 800.521.3714 Fax 714.956.3745

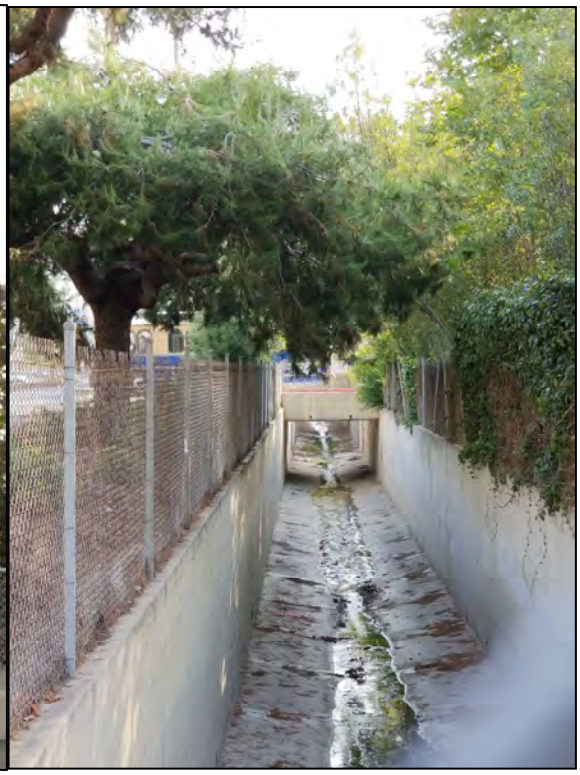

**Showing examples of the Aleppo pines & one sycamore tree which have branches which overhang the channel. Routine pruning focused on thinning & height reduction will mitigate the risk of branch failures into the channel.**

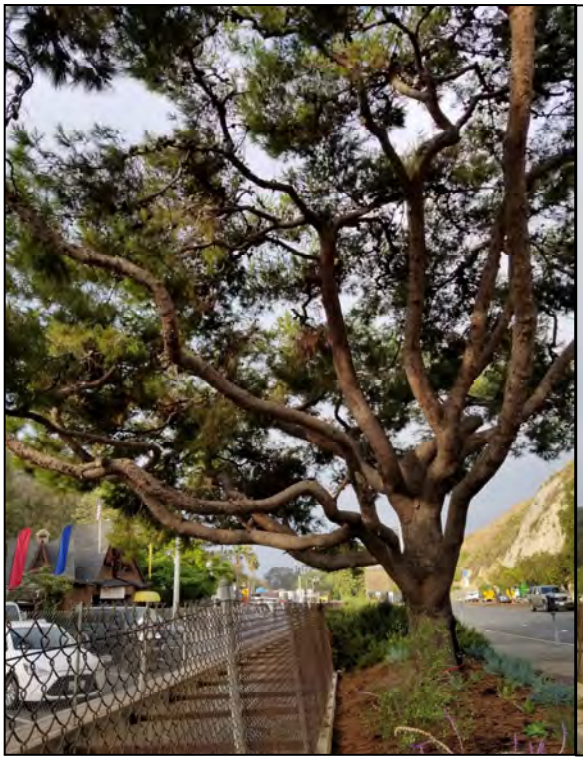

West Coast Arborists, Inc.

2200 E. Via Burton Street, Anaheim, CA 92806 714.991.1900 800.521.3714 Fax 714.956.3745

**The top images are showing examples of where root expansion has begun to impact the channel wall; while the bottom image shows the collapsed wall and the large root mass located on the other side.**

West Coast Arborists, Inc.
2200 E. Via Burton Street, Anaheim, CA 92806 714.991.1900 800.521.3714 Fax 714.956.3745

**Showing the row of Sugar Gum's just north of Forest Avenue, as seen from the parking lot and from the adjacent sidewalk. Note the overall poor condition of the trees and their very close proximity to the channel wall. Any efforts to rebuild the wall would negatively impact plant health & stability.**

West Coast Arborists, Inc.
2200 E. Via Burton Street, Anaheim, CA 92806 714.991.1900 800.521.3714 Fax 714.956.3745

**Showing additional examples of the Sugar Gum trees. Note the poor structure and how the trunk bases are growing right up against the channel wall & the trunks are leaning on the chain-link fence.**

West Coast Arborists, Inc.
2200 E. Via Burton Street, Anaheim, CA 92806 714.991.1900 800.521.3714 Fax 714.956.3745

The intent of this report was to provide as complete and unbiased an opinion as possible with regards to the current health and condition of the specific trees discussed above. It is hoped that the information provided is sufficient to enable management staff to make necessary decisions with regards to the current and future maintenance needs of these tree. However, should you have any questions or require additional information, please feel free to contact me at (714) 412-7813.

Respectfully,

*Rebecca Mejia*

Rebecca Mejia
ISA Certified Arborist #WE-2355A
ISA Qualified Tree Risk Assessor
West Coast Arborists Inc.



West Coast Arborists, Inc.
2200 E. Via Burton Street, Anaheim, CA 92806 714.991.1900 800.521.3714 Fax 714.956.3745

## *ASSUMPTIONS AND LIMITING CONDITIONS*

1. Care has been taken to obtain all information from reliable sources. All data has been verified insofar as possible; however, the Consultant can neither guarantee nor be responsible for the accuracy of information provided by others. Standard of Care has been met with regards to this project within reasonable and normal conditions.

2. The Consultant will not be required to give testimony or to attend court by reason of this report unless subsequent contractual arrangements are made, including payment of an additional fee for such services as described in the fee schedule and contract of engagement.

3. Loss or alteration of any part of this report invalidates the entire report.

4. Possession of this report or a copy thereof does not imply right of publication or use for any purpose by any other than the person to whom it is addressed, without the prior written consent of the Consultant.

5. This report and any values expressed herein represent the opinion of the Consultant, and the Consultant's fee is in no way contingent upon the reporting of a stipulated result, a specified value, the occurrence of a subsequent event, nor upon any finding to be reported.

6. Unless expressed otherwise: 1) information contained in this report covers only those items that were examined and reflects the condition of those items at the time of inspection; and 2) the inspection is limited to visual examination of accessible items without dissection, excavation, or coring, unless otherwise stated. There is no warranty or guarantee, expressed or implied, that problems or deficiencies of the tree(s) or property in question may not arise in the future.

7. Arborists are tree specialists who use their education, knowledge, training, and experience to examine trees, recommend measures to enhance the beauty and health of trees, and attempt to reduce the risk of living near trees. It is highly recommended that you follow the arborist recommendations; however, you may choose to accept or disregard the recommendations and/or seek additional advice.

8. Arborists cannot detect every condition that could possibly lead to the structural failure of a tree. Trees are living organisms that fail in ways we do not fully understand. Conditions are often hidden within trees and below ground. Arborists cannot guarantee that a tree will be healthy or safe under all circumstances, or for a specific period of time.

9. Any recommendations and/or performed treatments (including, but not limited to, pruning or removal) of trees may involve considerations beyond the scope of the arborist's services, such as property boundaries, property ownership, site lines, disputes between neighbors, and any other related issues. Arborists cannot take such considerations into account unless complete and accurate information is disclosed to the arborist. An arborist can then be expected to consider and reasonably rely on the completeness and accuracy of the information provided.

10. The author has no personal interest or bias with respect to the subject matter of this report or the parties involved. He/she has inspected the subject tree(s) and to the best of their knowledge and belief, all statements and information presented in the report are true and correct.

11. Unless otherwise stated, trees were examined using the tree risk assessment criteria detailed by the International Society of Arboriculture's publications *Best Management Practices – Tree Risk Assessment* and the *Tree Risk Assessment Manual* and *A Photographic Guide to the Evaluation of Hazard Trees (Matheny & Clark).*



West Coast Arborists, Inc.
2200 E. Via Burton Street, Anaheim, CA 92806 714.991.1900 800.521.3714 Fax 714.956.3745

# ORANGE COUNTY PUBLIC WORKS

## Frontage Road Mini Park

## Sycamore Tree Assessment (4)

SUBMITTED TO:

AUSTIN MORGAN
Project Management
Orange County Public Works

PREPARED BY:

REBECCA MEJIA
ISA Certified Arborist WE-2355A
ISA Qualified Tree Risk Assessor
Consulting Arborist, WCA Inc.

AUGUST 10, 2021

# Table of Contents

Summary ..... 1

Introduction ..... 1
- Assignment ..... 1
- Limits of Assignment ..... 2
- Purpose of Report ..... 2

Observations ..... 2
- Site Description ..... 2
- Site Map ..... 3
- Summary of Tree Conditions & Observations ..... 4

Risk Assessment ..... 5
- Risk Assessment Methodology ..... 5
- Limitations of Tree Risk Assessment ..... 5
- Risk Assessment Results ..... 6

Discussion ..... 6

Conclusions ..... 7

Mitigation ..... 8

Appendix A – Photographs. ..... 10

Appendix B – Tree Risk Matrices. ..... 19

Glossary ..... 20

Bibliography ..... 21

Assumptions & Limiting Conditions ..... 22

Certificate of Performance ..... 23

## Summary

On April 21, 2021, a request was received by our Plant Health Care Department for a construction impact report and a **Level 2 Basic Risk Assessment** for four sycamore trees located in the Frontage Mini Park in the City of Laguna Beach. These trees are identified in Laguna Beach's tree inventory (Arbor Access On-Line, AAOL) as Park-1, Park-2, Park-3, and Park-4. The risk assessment returned an overall **low** risk for branch failure for all four trees (this rating combines the probability of failure, impact, and consequences). The overall risk of damage due to future root encroachment ranged from low to **high** depending on the time frame and the tree.

I inspected all four trees and found them to be in good health and structural condition. Mitigation for identified **hazards** (if any) is provided in the conclusions and mitigation sections on pages 7 and 8. Based on the likelihood of branch failure and impact with the channel, future root encroachment into the channel wall, and the likelihood of adverse construction impacts, Park-4 should be considered for removal. The remaining three trees can be pruned and retained on-site; however, they can also be considered for removal with a moderate risk of root encroachment within 10-years.

*Refer to the glossary for words in bold.*

## Introduction

### Assignment

Orange County Public Works (OCPW) tasked West Coast Arborists Inc. (WCA) to provide the arborist services per proforma #68921. Prepare one construction impact report with tree site and detail review and offer recommendations to tree maintenance. The report will include the following:

- Visually inspect four sycamore trees. Provide an analysis of sycamore as a species.
- Determine if tree roots will damage the channel wall in the future.
- Provide information on how much tree trimming can be done.
- Provide information to help OCPW staff determine whether to protect the trees in place during construction or remove them.
- Perform a Level 2 Basic Risk Assessment; the stated target is the flood control channel. This assessment has two time-frames, 1-5 years and ten or more years for root encroachment.

- Submit one certified arborist report summarizing the assessment findings, including images and any maintenance recommendations (mitigation).
- All work is to be performed per American National Standards Institute A300 (Part-9)-2011 Tree Risk Assessment Standard and the International Society of Arboriculture (ISA) **Best Management Practices** for Tree Risk Assessment.

The **controlling authority** (OCPW) defined the assignment and how many parts/situations to have the risk assessment performed. The controlling authority is also responsible for determining the level of risk they are willing to accept and scheduling all recommended work. All tree trimming, removal, stump grinding, or plantings shall be done in compliance with current industry standards.

**Limitations of Assignment**

Being a visual assessment of the subject trees, the assignment was limited to what could be observed from the ground. Only exposed or easily exposed parts above ground level were inspected. Subsurface soil conditions and tree parts below ground were not disturbed or observed. It was a cloudy day with a light drizzle; however, there were no visual obstructions. The report is not intended to be legal advice and does not represent legal advice as such.

**Purpose and Use of the Report**

The purpose of this report is to provide as complete and unbiased an opinion as possible with regards to the health, condition, and maintenance recommendations of the inspected trees. The content of this report is intended to be used by OCPW with regard to the planned flood control channel replacement.

## OBSERVATIONS:

All four trees were inspected on the morning of June 7, 2021, beginning at 10 am. The trees were inspected by observing the upper canopy and proceeding down the tree(s) to the root flare and surface roots.

**Site Description**

- The site is located within the city of Laguna Beach; see Map 1, page 3.
- This is a mini-park located at the southeast corner of Laguna Canyon Road and Woodland Drive. The flood control channel runs along the park's west side, with regulated parking along the east side.
- The dripline of all four trees consists of irrigated landscape and decomposed granite.
- Visitors frequent the location, and there are several benches within the project area.

**Map 1: Showing the location of the four trees identified in the City Of Laguna Beach tree inventory as Park-1 (P-1), Park-2 (P-2), Park-3 (P-3), and Park-4 (P-4).**

**Summary (*not overall risk)* of Tree Conditions & Observations:**

| Tree# | DSH (inches) | Height (feet) | Spread (feet) | Offset* (feet) | Health* | Risk of failure & impact | Observations & Comments |
|---|---|---|---|---|---|---|---|
| Park-1 | 13 | 35-40 | 30x25 | 8 | Good | Branch: Low<br><br>Roots: 1-5yrs =Low<br><br>Roots: 10+yrs =Moderate | This tree leans slightly towards the east; much of the canopy is over the sidewalk and parking area. A branch failure from this tree is unlikely to impact the channel. The possibility of roots damaging the channel wall in 1-5 years is low, but it is moderate for 10 years. Construction impacts are expected to be minimal. Root cutting can safely be undertaken & this tree can be pruned to mitigate the risk of branch failures and retained at the site with minimal impact expected to the channel. |
| Park-2 | 12 | 35 | 25x30 | 8.5 | Good | Branch: Low<br><br>Roots: 1-5yrs =Low<br><br>Roots: 10+yrs =Moderate | This tree leans very slightly to the northeast with a balanced canopy. A branch failure from this tree is unlikely to impact the channel. The possibility of roots damaging the channel wall in 1-5 years is low, but it is moderate for 10 years. Construction impacts are expected to be minimal. Root cutting can safely be undertaken & this tree can be pruned to mitigate the risk of branch failures and retained at the site with minimal impact expected to the channel. |
| Park-3 | 13 | 40 | 30x30 | 18 | Good | Branch: Low<br><br>Roots: 1-5yrs =Low<br><br>Roots: 10+yrs =Moderate | This tree is located in a circular planter and sits the furthest away from the channel wall. The tree is upright with good canopy balance. A branch failure from this tree is very unlikely to impact the channel. The possibility of roots damaging the channel wall in 1-5 years is low, but it is moderate for 10 years. Construction impacts are expected to be minimal. Root cutting can safely be undertaken & this tree can be pruned to mitigate the risk of branch failures and retained at the site with minimal impact expected to the channel. |
| Park-4 | 12 | 35-40 | 30x25 | 6.5 | Good | Branch: High<br><br>Roots: 1-5yrs =Moderate<br><br>Roots: 10+yrs =High | This tree sits the closest to the channel of all four trees; it is upright, with a large portion of the canopy spanning over the channel edge. There is significant surface root development & several large roots growing in the direction of the channel. A branch failure from this tree is very likely to impact the channel in some manner. The possibility of roots from this tree affecting the channel wall in the future is moderate to high. Construction impacts to this tree are expected to be moderate. The tree can be pruned to reduce the likelihood of a branch failure. Based on the pattern of root development, the proximity to the channel wall, and the likelihood of construction impact, this tree should be considered for removal. |

*Offset=distance from the top of the channel wall to the trunk base, recorded in inches unless otherwise noted.
*Health: *Good:* the plant is healthy and relatively free from pests, disease, or stress; it may display 10% or less crown dieback.

## RISK ASSESSMENT

### Risk Assessment Methodology

Data collection for this project was used to derive a level of **risk** based on the matrices found in the ISA Best Management Practices (BMPs) for tree risk assessment (see Appendix B Tree Risk Matrices tables 1 and 2). The level of risk determined (*low, moderate, high, or extreme*) is to be used by risk managers to help in tree management decisions. When assessing risk, the target value is considered to categorize the consequences of failure *(negligible, minor, significant, or severe).* The people who use and frequent the target zone are generally the most critical targets. This assessment has two time-frames, 1-5 years for branch failure and root encroachment and ten years for root encroachment.

### Limitations of Tree Risk Assessment

Any change in the site usage, damage to the tree from biotic or abiotic causes, and/or construction work within the dripline of the tree(s) alters the conditions which this risk assessment was performed, and thus would require that a new assessment be performed.

According to the *Tree Risk Assessment Manual,* published by the International Society of Arboriculture (ISA), it is impossible to maintain trees free of risk: "There is no way to guarantee that a tree will not fail. Tree benefits increase as the age and size of trees increase; however, some level of risk must be accepted to experience the benefits provided. The goal of assessing and managing trees is to strike a balance between the risk that a tree poses and the benefits that individuals and communities derive from trees."

"A considerable level of uncertainty is typically associated with tree risk assessment due to our limited ability to predict natural processes (rate of decay, response growth, etc.), weather events, traffic and occupancy rates, and potential consequences of failure."

"Condition affecting trees change constantly; none of us will ever be able to predict every tree failure. Conducting a tree risk assessment neither ensures nor requires perfection. Risk assessment should, however, ensure that all reasonable efforts have been made to identify the *likelihood of failure,* the *likelihood of impact,* and the *consequences of failure* present at the time of assessment."

"Abnormally extreme storms such as tornadoes, hurricanes, and heavy freezing rain are not predictable and, in most cases, are not considered for categorizing *likelihood of failure."*

**Risk Assessment Results**

**Likelihood of Failure**

The conditions and site factors such as load on defects, rain, and wind events common to the region, response growth in the tree, previous failure history, tree health, and soil attributes are all considered when determining the likelihood of **failure**. The impact of loading on the crown/branches for all four trees is minor, with a **possible** likelihood of failure in the next 1-5 years. Loading on the trunk, roots, and root collars is minor for all four trees, with an **improbable** likelihood of failure. The likelihood of roots impacting the channel wall is improbable for the 1-5 year time frame for Park-1, Park-2, and Park-3 but possible for Park-4. For the 10-year time frame, the likelihood of root encroachment increases to possible for the first three trees and **probable** for Park-4.

**Likelihood of Impacting Target**

When assessing the likelihood of impact, factors such as occupancy rates, the direction of fall in the target zone, and target protection were considered. The target assessed for this project was the flood control channel. The occupancy rate is constant. The target and access to the target zone cannot be restricted. In the event of a branch or stem failure, the likelihood of impacting the target is **high** for Park-4 and **low** for the other three trees for both time frames. For the 1-5 year time-frame, target impact with regards to root encroachment is low for the first three trees and **moderate** for Park-4. For the 10-year time-frame, target impact increases to moderate for the first three trees and high for Park-4.

**Consequences of Failure**

To assess the consequences of a failure, factors such as target value, tree part size, and protection from failure part were considered. For Park-4, if a branch failure were to occur, the consequences would be **minor**. The part most likely to fail for the other trees is also a branch; consequences would be **negligible** if a failure were to occur. If root encroachment were to occur, consequences could be **significant to severe** for all four trees.

**Risk Rating**

By combining the consequences of failure with the likelihood rating, a risk rating is assigned and is based on the categorization of the above risk factors. Considering local weather patterns, with an emphasis on the winds which frequent the area, the risk rating for all assessed trees is low for the 1-5 year time-frame for branch failures and root encroachment. With a focus on root encroachment issues, the risk rating for the 10-year time frame for the first three trees is **moderate** and **high** for Park-4.

## DISCUSSION

**Species Profile:** The sycamore is a California native riparian tree and tolerates wet to dry soils, extreme heat, and high winds. This tree species has a moderate growth rate reaching 30-80 feet tall and 20-50 feet wide. It is considered a moderately deep-rooted tree but does produce surface roots which can sometimes result in heaved, cracked, or similar hardscape damage. Variable in shape, it can develop both upright and/or spreading forms, with an oval, rounded, or umbrella-shaped crown. Longevity of 150 years or more. Medium branch strength rating, moderately aggressive, strongly rooted structural root system.

**Root cutting**: When looking at the potential for construction impacts for this project, the following specifications have been considered when determining if root cutting can safely be undertaken without adverse impact to plant health or stability:

- Avoid root pruning any stressed trees (such as those with insect infestation, disease, or drought-impacted). *None of the subject trees show signs of stress.*
- Avoid leaning trees or those with other structural concerns (such as cavities, past root pruning wounds, extremely heavy or uneven canopy distribution). *Only 2 of the trees are leaning, and it is very slight, less than 10 degrees.*
- Avoid trees with substantial decay in roots, trunk, or crown. *None of the trees have any visible decay in their roots, trunk, or crown.*
- Avoid cutting on the windward side of the tree. *No roots on the windward side of the trees will be cut.*
- Avoid cutting on more than one side of the tree in the same year. *Cutting is only planned for the west side of the tree.*
- Avoid large, tension-loaded roots. *Only the roots of the Park-4 tree fall into this category; none of the other trees will lose tension roots. If this changes, that tree should be reassessed.*
- Never cut into or otherwise damage the buttress/root crown. *Only the root crown of the Park-4 tree will be impacted.*
- Avoid species considered intolerant of root pruning. *This species is tolerant of root pruning.*
- Avoid pruning deciduous trees when in full leaf. *The subject trees are all deciduous; if possible, avoid cutting the roots during the heat of the summer months.*
- Avoid cutting any support roots within a minimum of 3.5 times the tree's trunk diameter (DSH). *The only tree that this distance cannot be accommodated is the Park-4 tree.*

It should be understood that the further out in time you try to project, the harder it is to surmise what damage(s) might occur due to root expansion or canopy growth, there are too many variables. Even within the same tree species, you can have a wide range of structural variance, including both canopy growth and root development. As seen with this location, one tree can be deeply rooted with very few surface roots, and the tree next to it can have prolific surface roots.

**CONCLUSIONS:**

- All four of the sycamore trees were found to be healthy and returned a low-risk rating for branch failure and/or root encroachment for a 1-5 year time frame but moderate to high risk of root encroachment for a 10-year time frame.
- The tree part most likely to fail on any of the trees would be small to medium-sized branches. Expected damages from such a failure would be negligible or minor for all four trees regardless of the time frame. Only the canopy of Park-4 overhangs the channel and could be expected to drop branches into the channel. The overall risk for all four trees due to branch failure is low.
- Based on their distance from the channel, the first three trees are not expected to have any long-term adverse impacts related to construction activities involving the flood control channel.
    - Construction plan details indicate that the contractor will need to excavate 3-feet behind the channel wall. Given the basic specifications listed above in the discussion section, the first three trees could be safely root pruned to accommodate the excavation process.
    - The trees will require pruning to accommodate the minimum height requirements of construction equipment and the use of a crane for lifting prefabricated sections into the channel. The Park-4 tree will require significant canopy reduction to allow for overhead crane activities.
- Construction impacts to the roots of Park-4 are expected to be moderate. This tree has a well-developed root system extending close to the channel edge, and it is growing within 6.5-feet of the channel. Given the basics of root cutting, the excavation process is expected to moderately impact plant health but not stability.
- Based on their distance from the channel, there is a low probability of root encroachment issues in 1-5 years for the first three trees. However, there is a moderate probability of encroachment issues in the next ten years without mitigation (see mitigation offered below). There is a moderate to high probability that the Park-4 tree will have encroachment issues within the 10-year time frame, especially considering that roots from this tree are already growing close to the wall.

**MITIGATION**: Based on the observations and discussion provided above, the following risk mitigation and maintenance actions are recommended:

- Canopy prune Park-1, Park-2, and Park-3 to reduce the likelihood of a branch failure, which, although unlikely, could fall into the flood control channel.
    - Prune as needed for construction equipment clearance. Trim only what is necessary to accommodate the equipment being used. All cuts should be made cleanly and at a branch union; flush cuts outside the branch collar will result in abundant flush growth, increasing the likelihood of a future branch failure.

  - Implement crown cleaning, thinning, and reduction techniques, removing no more than one-third of the live canopy in any one year. The overall risk level of these three trees is "low," **residual risk** is also low.
  - Root prune Park-1, Park-2, and Park-3. It is believed that the open trench necessary for the reconstruction of the channel wall will expose roots on these three trees. However, root cutting is only occurring on one side of the tree(s) and will accommodate the 3.5-foot minimum safe distance requirement indicated in the guidelines listed in the discussion section.
- Park-4 should be considered for removal. This opinion is based on the tree's closeness to the channel, the likelihood of branch failure, potential root damage to the channel, excessive root loss due to excavation, and overhead crane operations which will require canopy reduction beyond industry standards. Residual risk is low. Of the four trees, this one has the greatest likelihood of causing future damage to the channel and of being harmed by the construction activities. Based on their moderate root encroachment risk for the 10-year time frame, Park-1, Park-2, and Park-3 can be considered for removal if the moderate risk of root encroachment is considered too high for this channel.
- Install plastic, linear root barrier along the west side of any trees retained or planted as part of this project. Root barriers would be installed before fully backfilling any open trenches parallel to the trees. Root barriers come in numerous heights, ranging from 12-inches to 48-inches; all are 24-inches wide. In this situation, I would recommend using the 36-inch or 48-inch style. Using root barriers at this project site will help encourage deeper rooting and guide root growth away from the channel wall.

The controlling authority is also responsible for determining the level of risk they are willing to accept and scheduling all recommended work. All tree trimming, removal, stump grinding, or plantings shall be done in compliance with current industry standards as provided by the *American National Standards Institute A300 (Part-1)-2017 Pruning*, and *Best Management Practices: Tree Pruning (Third Edition).*

# APPENDIX A - PHOTOS

Image 1. Showing the tree identified as Park-1 in the Laguna Beach tree inventory, AAOL.

Image 2. Showing the distance of Park-1 from the channel wall. Although OCFCD policy restricts trees within 10-feet of the channel, there does not appear to be any encroachment issues involving the roots or canopy. However, installing a linear root barrier can aid in directing root growth away from the channel.

Image 3. Showing the tree identified as Park-2 in the Laguna Beach tree inventory. Installation of linear root barrier can aid in directing root growth away from the channel.

Image 4. Showing the distance of Park-2 from the channel wall. OCFCD policy restricts trees within 10-feet of the channel, and there does appear to be more surface roots from this tree growing towards the channel and parallel to it. The tree is at a safe distance and can be considered for root cutting and installing a linear root barrier to direct root growth away from the channel.

Image 5. Showing the tree identified as Park-3 in the Laguna Beach tree inventory and its distance from the channel wall. Construction is not expected to have long-term impacts on the tree.

Image 6. Showing the tree identified as Park-4. OCFCD policy restricts trees within 10-feet of the channel. There are multiple concerns with this tree, including root and canopy encroachment, stability issues if roots are severed, and the severity of canopy pruning needed for crane operations.

Image 7. Showing the distance of Park-4 from the channel wall. The necessary excavation will most likely impact the structural roots of this tree.

Image 8. Showing the canopy of Park-4 and how it hangs over the channel.

## APPENDIX B - TREE RISK MATRICES

The International Society of Arboriculture tree risk assessment matrices were used for the subject tree to determine the level of risk for a one-year time-frame. Table 1 is used first to determine the likelihood of failure (by categorizing the likelihood of impact to a target by a tree part in the time-frame. Table 2 references the consequences of the failure with the likelihood from Table 1 to give a risk rating for the tree(s). All the trees were determined to have a Low risk rating for branch failure but a Moderate to High risk for root encroachment for a 10-year time frame.

Table 1.

| **Likelihood Matrix** | | | | |
|---|---|---|---|---|
| | **Likelihood of Impacting Target** | | | |
| **Likelihood of Failure** | **Very Low** | **Low** | **Medium** | **High** |
| Imminent | Unlikely | Somewhat Likely | Likely | Very Likely |
| Probable | Unlikely | Unlikely | Somewhat likely | Likely |
| Possible | Unlikely | Unlikely | Unlikely | Somewhat Likely |
| Improbable | Unlikely | Unlikely | Unlikely | Unlikely |

Table 2

| **Risk Rating Matrix** | | | | |
|---|---|---|---|---|
| | **Consequences of Target Impact** | | | |
| **Likelihood of Failure & Impact** | **Negligible** | **Minor** | **Significant** | **Severe** |
| Very Likely | Low | Moderate | High | Extreme |
| Likely | Low | Moderate | High | High |
| Somewhat Likely | Low | Low | Moderate | Moderate |
| Unlikely | Low | Low | Low | Low |

# GLOSSARY

**Best Management Practices (BMPs)** – The International Society of Arboriculture has developed a series of Best Management Practices (BMPs) to interpret tree care standards and provide guidelines of practice for arborists, tree workers, and the people who employ their services.

**Canopy –** The part of the crown composed of leaves and small twigs.

**Consequences of failure –** Personal injury, property damage, or disruption of activities due to the failure of a tree or tree part. **Negligible** (No personal injury, low-value property damage, or disruptions that can be replaced or repaired). **Minor** (Minor personal injury, low-to-moderate value property damage, or small disruption of activities). **Significant** (substantial personal injury, moderate-high value property damage, or considerable disruption of activities). **Severe** (serious personal injury or death, high-value property damage, or disruption of essential activities).

**Controlling Authority -** An agency, organization, or corporate entity with the legal authority and/or obligation to manage individual trees or tree populations.

**Crown cleaning** – An Arboriculture term used to describe selective pruning to remove one or more of the following: dead, diseased, infested, rubbing, declining, detached, and/or broken branches.

**Crown reduction** – An arboricultural term referring to decreasing branch length or plant height and/or spread.

**Crown thinning -** An Arboriculture term used to describe selective pruning to reduce density at the crown periphery.

**Dripline** – An imaginary line defined by the branch spread of a single plant or group of plants.

**Failure** – Breakage of stem, branch, roots, or loss of mechanical support in the root system.

**Hazards** – Situations or conditions that are likely to lead to a loss, personal injury, property damage, or disruption of activities. A hazard is the tree part(s) identified as a likely source of harm in relation to trees.

**Improbable -** in the context of risk assessment, this term is used when a failure is unlikely to occur even under severe conditions within the specified time frame.

**Level 2**: **Basic Assessment –**The standard assessment performed by arborists in response to most client requests for tree risk assessments. It consists of a detailed visual inspection of a tree and its surrounding site and synthesizes the information collected.

**Likelihood of target impact** – **Very low** (the chance of the failed tree or branch impacting the specified target is remote). **Low** (it is not likely that the failed part will impact the target). **Medium** (the failed component may or may not impact the target, with nearly equal likelihood). **High** (the failed tree part will most likely impact the target).

**Possible** – in the context of risk assessment, the term is used when a failure may occur but is unlikely during normal weather conditions within the specified time frame.

**Residual risk** – the assessed risk remaining after mitigation measures.

**Risk –** The combination of the likelihood of an event and the severity of the potential consequences. In the context of trees, risk is the likelihood of a conflict or tree failure occurring and affecting a target and the severity of the associated consequence—personal injury, property damage, or disruption of activities.

**Risk Rating (**of part) – the risk rating of the individual part for a specified target; the risk rating is categorized using Matrix 2: Risk rating matrix. Risk rating terms are *low, moderate, high,* and *extreme.*

**Target** – People, property, or activities that could be injured, damaged or disrupted by a tree or one of its parts.

**Time frame –** Time period for which an assessment is defined.

# BIBLIOGRAPHY

Costello, Laurence R., and K.S. Jones. *Reducing Infrastructure Damage By Tree Roots: A Compendium of Strategies*. Illinois: International Society of Arboriculture, 2003. Print.

Dunster, Julian A., E. Thomas Smiley, Nelda Matheny, and Sharon Lilly. *Tree Risk Assessment Manual (Second Edition)*. Illinois: International Society of Arboriculture, 2017. Print.

Fite, Kelby and Thomas E. Smiley. *Best Management Practices: Managing Trees During Construction (Second Edition).* Illinois: International Society of Arboriculture, 2016. Print.

Harris, Richard W., James R. Clark, and Nelda P. Matheny. *Arboriculture: Integrated Management of Landscape Tree, Shrubs, and Vines*. *Fourth Edition*. New Jersey: Prentice-Hall, 2004. Print

Lilly, Sharon J., Edward F. Gilman, and E. Thomas Smiley. *Best Management Practices: Tree Pruning (Third Edition)*. Illinois: International Society of Arboriculture, 2019. Print

Smiley, Thomas E., Nelda P. Matheny, and Sharon Lilly. *Best Management Practices: Tree Risk Assessment.* Illinois: International Society of Arboriculture, 2011. Print.

# ASSUMPTIONS AND LIMITING CONDITIONS

1. Care has been taken to obtain all information from reliable sources. All data has been verified insofar as possible; however, the Consultant can neither guarantee nor be responsible for the accuracy of the information supplied by others. Standard of Care has been met with regards to this project within reasonable and normal conditions.

2. The Consultant will not be required to give testimony or attend court because of this report unless subsequent contractual arrangements are made, including payment of an additional fee for such services as described in the fee schedule and contract of engagement.

3. Loss or alteration of any part of this report invalidates the entire report.

4. Possession of this report or a copy thereof does not imply a right of publication or use for any purpose by any other than the person to whom it is addressed without the prior written consent of the Consultant.

5. This report and any values expressed herein represent the Consultant's opinion. The Consultant's fee is in no way contingent upon the reporting of a stipulated result, a specified value, the occurrence of a subsequent event, nor upon any finding to be reported.

6. Unless expressed otherwise: 1) information contained in this report covers only those items examined and reflects the condition of those items at the time of inspection; and 2) the inspection is limited to visual examination of accessible items without dissection, excavation, or coring unless otherwise stated. There is no warranty or guarantee, expressed or implied, that problems or deficiencies of the tree(s) or property in question may not arise in the future.

7. Arborists are tree specialists who use their education, knowledge, training, and experience to examine trees, recommend measures to enhance the beauty and health of trees, and attempt to reduce the risk of living near trees. It is highly recommended that you follow the arborist recommendations; however, you may choose to accept or disregard the recommendations and/or seek additional advice.

8. Arborists cannot detect every condition that could lead to the structural failure of a tree. Trees are living organisms that fail in ways we do not fully understand. Conditions are often hidden within trees and below ground. Arborists cannot guarantee that a tree will be healthy or safe under all circumstances or for a specific period of time.

9. Any recommendations and/or performed treatments (including, but not limited to, pruning or removal) of trees may involve considerations beyond the scope of the arborist's services, such as property boundaries, property ownership, site lines, disputes between neighbors, and any other related issues. Arborists cannot take such considerations into account unless complete and accurate information is disclosed to the arborist. An arborist can then be expected to consider and reasonably rely on the completeness and accuracy of the information provided.

10. The author has no personal interest or bias with respect to the subject matter of this report or the parties involved. He/she has inspected the subject tree(s), and to the best of their knowledge and belief, all statements and information presented in the report are true and correct.

11. Unless otherwise stated, trees were examined using the tree risk assessment criteria detailed by the International Society of Arboriculture's publications *Best Management Practices – Tree Risk Assessment* and the *Tree Risk Assessment Manual* and *A Photographic Guide to the Evaluation of Hazard Trees (Matheny & Clark)*.

# Certificate of Performance

**Premises:** Frontage Mini Park, City of Laguna Beach

I, Rebecca Mejia, Certify that to the best of my knowledge and belief:

1. The statements of fact contained in this report are true and correct.
2. I have personally inspected the tree(s), and property referenced in this report and accurately stated my findings.
3. I have no current or prospective interest in the tree(s) or the property that is/are the subject of this report, and I have no personal interest or bias concerning the parties involved.
4. The analysis, opinions, and conclusions were developed, and this report has been prepared according to commonly accepted arboricultural practices and standards.
5. No one provided significant professional assistance to me, except where may be noted within the report.
6. My compensation is not contingent upon the reporting of conclusions that favors the cause of my client or any other party nor upon the results of the assessment, the attainment of stipulated results, or the occurrence of any subsequent events.

I further certify that I am a member in good standing with the International Society of Arboriculture, an ISA Certified Arborist, and an ISA Qualified Tree Risk Assessor. I hold a Bachelor of Science degree in Forestry and Natural Resources Management, with a minor in Urban Forestry. I have been a Certified Arborist since 1996 and in the practice of arboriculture for over 25 years.

Signed:

*Rebecca Mejia*

Rebecca Mejia
ISA Certified Arborist # WE-2355A
ISA Qualified Tree Risk Assessor
West Coast Arborists, Inc.

Date: August 10, 2021

# Attachment G

August 9, 2019

Ms. Nardy Khan, PE
Deputy Director, Orange County Infrastructure Programs
300 N. Flower Street
Santa Ana, California 92703

RE: Structural Evaluation of Laguna Canyon Channel

Dear Ms. Khan,

Pursuant to the request of Orange County Public Works (OCPW), HDR Engineering, Inc. (HDR) has completed a structural evaluation for the existing condition of the Laguna Canyon Floodwater Control Channel. The concrete walls of the channel have sustained structural damage in recent years and we understand OCPW is planning repair construction and mitigation to prevent future deterioration. HDR assigned Jenny Carlson, PE, SE, to lead the structural evaluation. Ms. Carlson is a registered structural authority engineer in the State of California, license number S3904.

BACKGROUND

The portion of the Laguna Canyon Channel running alongside Laguna Canyon Road (State Highway 133) from just north of Woodland Drive to Forest Ave, was constructed between 1951 and 1957 according to OCPW's record drawings. See Figure 1, attached. It is a typical concrete lined channel commonly utilized for stormwater flood control during that era. The channel is maintained by OCPW, however, the City of Laguna Beach controls easements on both sides of the channel. Over the years trees and other landscaping have deliberately and inadvertently been developed close to the tops of the channel walls. As part of their maintenance program, OCPW periodically assesses the structural condition of this channel. Over the last 5 years, OCPW has noted deterioration of the walls such as cracking and tilting in the vicinity of now mature trees along the wall. In February of 2019 a section of the channel wall lined by mature trees collapsed and has been shored, but not permanently repaired. OCPW wishes to permanently repair the collapsed section of the wall. Discussions between OCPW and the City resulted in a request from the City for OCPW to have the wall evaluated by a licensed structural engineer, registered in the State of California.

REFERENCE

The following documents have been utilized for this evaluation:

- "Laguna Canyon Storm Drain" Plans, November, 1951, Dwg No. I02-101-2-A, Sheets 1 to 4
- "Laguna Canyon Channel" Plans, April, 1957, Dwg No. I02-101-6-A, Sheets 1 to 5
- "Laguna Beach Village Entrance Improvements" Plans, Bid Set, June, 2018, 105 sheets.
- Letter to Mr. John Pietig from Jeff Ernst, dated June 27, 2019, "Protection of Laguna Canyon Channel- Justification for City's Removal of Adjacent Trees".

CONSTRUCTION DETAILS AND ANALYSIS

The channel walls and floor are constructed of reinforced concrete. The walls vary in height from 7.5 feet to a maximum height of ten feet. The wall thickness varies from seven to nine inches. The walls are reinforced with one layer of steel bars on the exterior (tension) side only. The walls are simple cantilevers with no top anchorage. HDR's analysis shows the wall design is adequate for typical backfill soil pressures and ground water to the top of the wall with a reasonable, but not large, margin of safety. The

wall is not designed to accommodate any significant surcharge load (a load such as a large vehicle parked within a few feet of the wall).

SITE OBSERVATIONS

On July 18, 2019, Jenny Carlson visited the Laguna Canyon site to assess the structural condition of the channel. The following observations were recorded:

1. The shoring for the section of wall that collapsed in February consists of HP soldier piles with steel plate lagging. Steel shoring struts are installed between the channel walls to brace the temporary repair and to reinforce existing concrete walls with noticeable tipping. See Photos 1 and 2.
2. From Woodland Ave to Laguna Canyon Frontage Rd., the remaining concrete walls on the State Highway side of the channel exhibit significant tilting up to approximately 10 degrees inward (towards the interior of the channel). See Photo 3. The base joint between the wall and channel bottom has cracked open and water seeping through the crack is evident.
3. Between Laguna Canyon Frontage Rd. and the middle entrance to the City's Public Works Operations Center, extensive landscaping upgrades have been installed as part of the City's Village Entrance Improvement project. This includes young trees within a few feet of the existing channel walls. See Photo 4.
4. Near the end of the channel at Forest Ave on the side opposite of the State Highway, there are several large trees within inches of the top of the wall. The roots of these trees are growing over the top of the wall. See Photo 5. The wall has sustained cracking along the face directly adjacent to the trees. See Photo 6. The storm outlet pipe in the wall has cracked away from the wall. This crack is several inches deep at the top of the inlet and completely closed at the bottom, indicating the wall is tilting toward the interior of the channel. See Photos 7 and 8.

CONCLUSIONS

Based on calculations performed by Ms. Carlson, the Laguna Canyon Channel walls do not appear to have been designed to sustain surcharge loads. The margin of safety in the original design does not allow for significant added loads.

The mature trees near the tops of the walls apply significant weight on the walls, but more importantly, the tree roots apply very large lateral pressures against the walls. These pressures induce high stresses in the reinforcing steel bars in the walls. When the tension in the reinforcing steel gets too high, the concrete cracks, allowing water to reach the steel bars. Over time, the water causes corrosion in the steel bars.

The combination of high stress and corrosion is very detrimental to the wall and likely led to the collapse of a portion of the wall in February of 2019.

The existing trees have reached a point of maturity where the root pressure on the walls has passed the structural strength limit of the walls. The visible tilting and cracking discussed above are evidence of a failure in progress. This failure needs to be addressed immediately.

A review of the Village Entrance Improvement project plans shows that root guards were installed with the new trees. It appears the root guards are 24 inches in depth (from grade) and are installed only on the

sides of the trees adjacent to new concrete infrastructure such as sidewalks. These root guards are not adequate to protect the existing flood channel walls from future damage as these new trees mature.

RECOMMENDATION

Based on our evaluation, the trees adjacent to the top of the Laguna Canyon Channel between Woodland Ave. and Laguna Canyon Frontage Rd. and immediately upstream of Forest Ave., should be removed. This includes any new/young trees. If the City of Laguna Beach plans to plant any trees within 25 feet of the top of the channel walls in the future, it is imperative that the City coordinate the planting plans with the Orange County prior to planting. We understand repairs for the deteriorated walls are being planned under a separate scope of work.

HDR appreciates the opportunity to be of service. Please do not hesitate to contact us with questions. Ms. Carlson may be contacted at 360-975-6829 or Jennfier.Carlson@HDRInc.com.

Regards,
HDR Engineering, Inc.

Jennifer Carlson, PE, SE
Senior Project Manager

REGISTERED PROFESSIONAL ENGINEER
JENNIFER L. CARLSON
No. S3804
Exp. 06/30/20
STRUCTURAL
STATE OF CALIFORNIA

8/9/2019

Photo 1 Channel Temporary Repair

Photo 2 Shoring Installed to Reinforce Tilting Walls

Photo 3 Tilting/Bowed Walls in Vicinity of Mature Trees

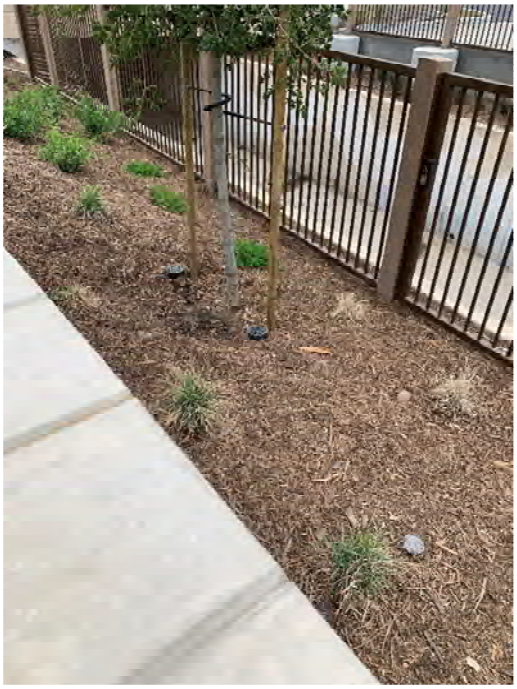

Photo 4 New Trees Recently Planted Close to Channel Wall

Photo 5 Tree Roots Growing Over the Channel Wall

Photo 6 Cracks in Wall Adjacent to Tree Roots

Photo 7 Cracking at Stormwater Inlet

Photo 8 Large Cracks at Top of Inlet Indicating Wall Tilting

# Laguna Canyon Channel Replacement Project

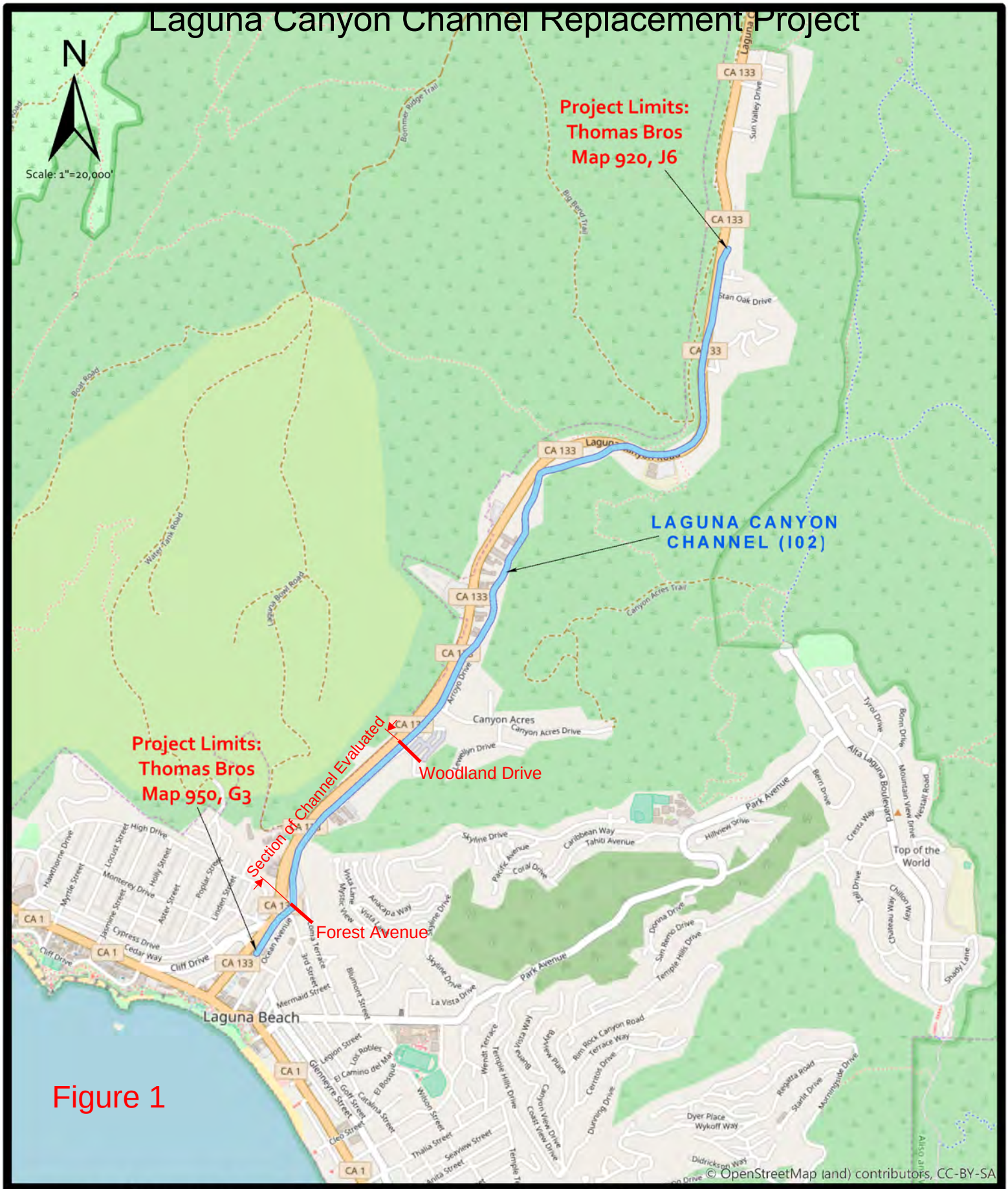


| County of Orange OC Public Works Department | MAINTENANCE ENGINEERING SUPPORT | LOCATION MAP |
|---|---|---|
| | MAY 2018 | |

LAGUNA CANYON CHANNEL (I02)

# Attachment H

26" PLATANUS RACEMOSA / CALIFORNIA SYCAMORE MULTI-TRUNK

20" PINUS HALEPENSIS / ALEPPO PINE

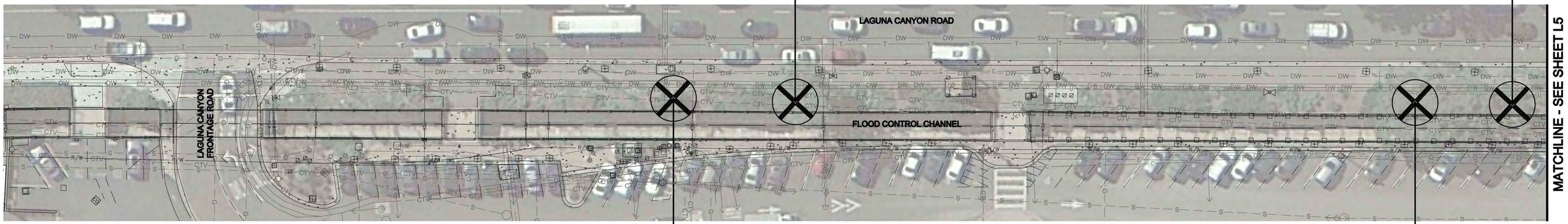


NORTH
SCALE: 1" = 20'-0"

4" PLATANUS RACEMOSA / CALIFORNIA SYCAMORE

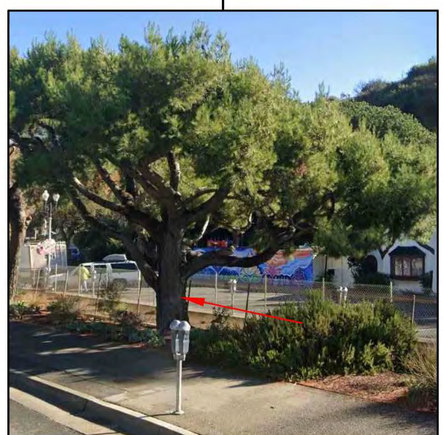

27" PINUS HALEPENSIS / ALEPPO PINE

LEGEND:
RED ARROW DEPICTS THE SPECIFIC TREE TO BE REMOVED

TREE REMOVAL PLAN
SHEET 1 OF 2

Michael Baker INTERNATIONAL
5 Hutton Centre Drive, Suite 500
Santa Ana, CA 92707
Phone: (949) 472-3505
MBAKERINTL.COM

ORANGE COUNTY PublicWorks

ORANGE COUNTY FLOOD CONTROL DISTRICT

LAGUNA CANYON CHANNEL REPLACEMENT PROJECT

L2

FEBRUARY 2021

EXHIBIT B

28" PINUS HALEPENSIS / ALEPPO PINE

20" PINUS HALEPENSIS / ALEPPO PINE

Tree to be pruned and protected in place

12" PLATANUS RACEMOSA / CALIFORNIA SYCAMORE

20" PINUS HALEPENSIS / ALEPPO PINE

12" PLATANUS RACEMOSA / CALIFORNIA SYCAMORE

Tree to be pruned and protected in place

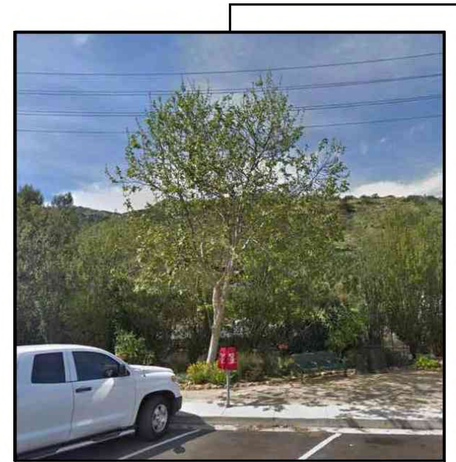

14" PLATANUS RACEMOSA / CALIFORNIA SYCAMORE

Tree to be pruned and protected in place

12" PLATANUS RACEMOSA / CALIFORNIA SYCAMORE

LEGEND:
RED ARROW DEPICTS THE SPECIFIC TREE TO BE REMOVED

TREE REMOVAL PLAN
SHEET 2 OF 2

Michael Baker INTERNATIONAL
5 Hutton Centre Drive, Suite 500
Santa Ana, CA 92707
Phone: (949) 472-3505
MBAKERINTL.COM

ORANGE COUNTY PublicWorks

ORANGE COUNTY FLOOD CONTROL DISTRICT

LAGUNA CANYON CHANNEL REPLACEMENT PROJECT

L2

FEBRUARY 2021

EXHIBIT B

November 4, 2021

Planning Commission
Public Works Department
CITY OF LAGUNA BEACH
505 Forest Avenue

Laguna Beach, CA 92651

Re: Laguna Canyon Channel Replacement Project – Concept Review Package

This letter and plan attachment outline suggestions for improvements to the above project. I am a landscape architect and submitting this material as a resident of Laguna Beach. Various neighborhood groups and organizations are also very concerned about this project and will be submitting their own correspondence.

As an extension of the Village Entrance and within the Civic Arts District, this high-visibility location deserves special design consideration. The proposed options of upgraded channel fencing and color / textured concrete walkways to match the Village Entrance are appropriate and should be implemented. Of particular concern is the proposed removal of all existing pine and sycamore trees along Laguna Canyon Road [without replacements], and the removal of the existing Frontage Road Mini Park at Woodland Drive. These are extreme measures that will adversely affect the beauty of this location to the detriment of the local residents [Woodland Drive neighborhood, Thurston Trailer Park, and the Sawdust Festival], the broader community, and visitors alike. The iconic image of twisted mature pines and native sycamore trees along the creek as a foreground to the Sawdust Festival will be changed to a treeless streetscape, lacking the rich visual character that is treasured in Laguna Beach.

The following are recommendations for your consideration:

<u>Preservation of the Frontage Road Mini Park</u>

The failure of some historic pine trees near the entrance to the Sawdust Festival in a 2019 winter rainstorm damaged 265 linear feet of the channel wall in that location, and created justification for this 1,200 linear feet replacement project. Following the removal of these pine trees and others in the vicinity, Orange County Flood Control District (OCFCD) installed temporary steel bracing to strengthen the channel and prevent future channel failure. This bracing was not installed north of the pedestrian bridge that separates the Thurston Trailer Park and the Boys / Girls Club. The omission of steel bracing in the channel in this area [adjacent to the Mini Park], and the long distance between the original failure near the Sawdust Entrance, suggests that this northern portion of the proposed channel replacement may not be necessary.

The Frontage Road Mini Park was constructed in 2012 on an unsightly vacant lot. The neighborhood goals for the park were to provide rustic beautification, seating and shade for neighborhood residents, and [equally important] a dense vertical shrub screen to protect the neighborhood from the noise and visual distractions of Laguna Canyon Road. After approximately 9 years of growth, the park has achieved these goals. While the OCFCD notes that the existing large native sycamore trees will be "either removed and re-planted or protected-in-place", the existing park in its entirety will be removed

to allow the new channel to be installed. This landscape demolition will include the existing mature shrub hedge that is now providing 100 % screening of Laguna Canyon Road from the neighborhood. After channel replacement, the park landscaping would be re-installed from "square one" and the neighborhood would have to wait another decade to appreciate the mature landscaping that now exists.

If this section of channel replacement [north of the pedestrian bridge] were eliminated from the project scope of work, compromises regarding existing trees could be made to favor channel stability. For instance, the 2 pine trees on the LCR side of the channel could be removed [to prevent possible future failure] since the existing sycamore trees behind the channel in the park provide sufficient vertical tree cover and visual interest. In the park area, the northernmost sycamore tree is approximately 6 feet from the channel wall. Since the nearby sycamore tree is approximately 16 feet from the channel wall and is growing robustly, this northernmost tree could be permanently removed. The 2 remaining sycamore trees in the park, to the south, are approximately 8-9 feet from the channel wall and appear to be sufficiently distant from the channel to not provide a stability issue. If this section of the channel were eliminated from the scope of the project, the linear footage of channel replacement would be reduced by nearly 20%. This would result in a significant cost saving, not to mention the cost saving of omitting the removal and re-installation of the park. Even if the cost of this project may be already budgeted by OCFCD, the savings of this change are not insignificant. In addition this omission would reduce damage to the beauty and inconveniences to the neighborhood.

<u>Preservation of existing LCR parkway trees – CONCEPT A [see attachment]</u>

Assuming that the 2 existing pine tree are removed north of the pedestrian bridge [per above recommendation], that leaves 3 existing pine trees and 2 existing sycamore trees in the area fronting the Sawdust Festival and 7 Degrees. It is recommended that the structural cross-section of the channel wall replacement be upgraded to withstand the future weight of the trees, in the same way that commercial project foundations are designed to accommodate existing historic trees. This could be as simple as thickening the wall and adding additional reinforcement. With root pruning, crown reduction, and proper yearly maintenance, it seems feasible to preserve these remaining 5 trees. Concept A maintains the current curb-adjacent sidewalk layout and proposes some additional native trees in the 10 ft wide planted LCR parkway between the sidewalk and the channel. This is the current 10' wide sidewalk / 10' wide parkway condition.

Healthy, mature trees provide significant financial value for their aesthetics and are public assets. Removal of significant trees is in violation of General Plan policies. Such significant trees should not be removed unless no other options are available, this does not appear to be the case.

<u>Adding additional trees by changing sidewalk layout – CONCEPT B [see attachment]</u>

A second option is to create a meandering sidewalk so that the sidewalk would change back-and-forth from a curb-adjacent location to a channel-adjacent location, thereby creating planting zones for trees that are 10 ft from the channel wall. This option assumes that the existing 5 pine and sycamore trees in front of the Sawdust Festival would be removed. This option proposes an 8 ft wide walkway adjacent to the channel, an 8 ft wide planted LCR parkway, and a 4 ft wide decomposed granite (DG) pathway curb-adjacent to allow parking meter and parking access [20 ft wide total ROW]. This DG access for passengers exiting parallel parking is similar to the Village Entrance design. While this concept does not

preserve the existing trees, it does allow for planting of new trees…which the current OCFCD plan does not.

Caltrans tree setback requirements

On page 3 of the Review Package it states that Caltrans requires trees to be 30 ft away from the "Traveled Way" line. For the parallel parked LCR, the "Traveled Way" line would be presumably 10 ft from the curb. Therefore, the 30 ft requirement for "no trees" would extend all the way to the edge of the channel [encompassing all of the 20 ft ROW as a "no tree zone"]. This does not appear to be consistent with current Caltrans street tree planting procedures along Coast Highway, for instance, and other Caltrans routes where curb adjacent street trees are installed. It is understood that speed limits influence the size and location of allowed street trees on Caltrans highways. However, it doesn't appear that the speed limit for LCR between Canyon Acres and the FOA entrance [the channel replacement zone] should be any higher than Coast Highway locations where street trees are being approved by Caltrans. For these reasons it is hoped that this requirement can be negotiated so that trees can be accommodated in this very important and highly-visible location.

Generally speaking, the landscape palette proposed [based on the Village Entrance] is an appropriate one. Minor suggestions can be provided at a later date. However, these I bring these important site planning alternatives forward now so that they can be evaluated and incorporated into the design during the OCFCD planning process. It's important not to wait until the plans are finalized to provide comments.

Thank you for considering these suggestions for this most important project.

Sincerely,

Bob Borthwick, ASLA
600 Brooks Street
Laguna Beach, CA

EXISTING FRONTAGE ROAD MINI-PARK

EXISTING PINE TREES

EXISTING SYCAMORE

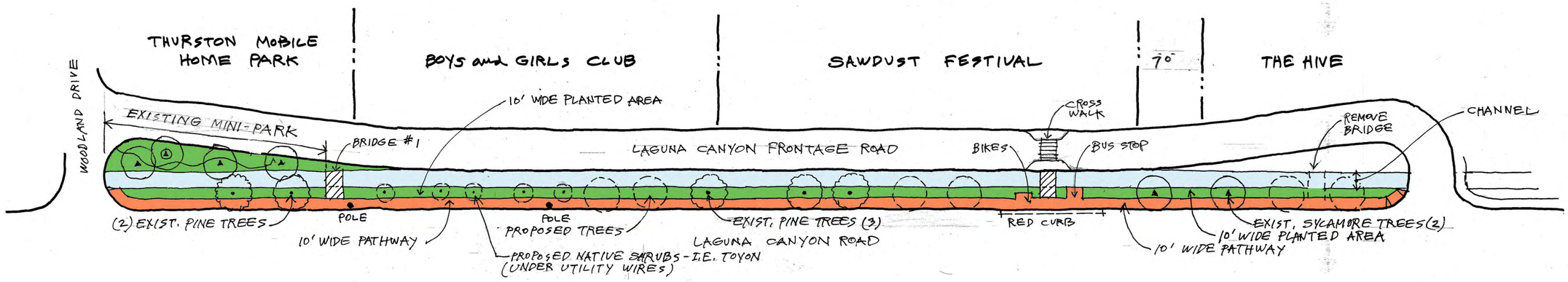


LAGUNA CANYON CREEK CHANNEL

**CONCEPT A**

* REINFORCED CHANNEL WALL TO SAVE EXISTING TREES

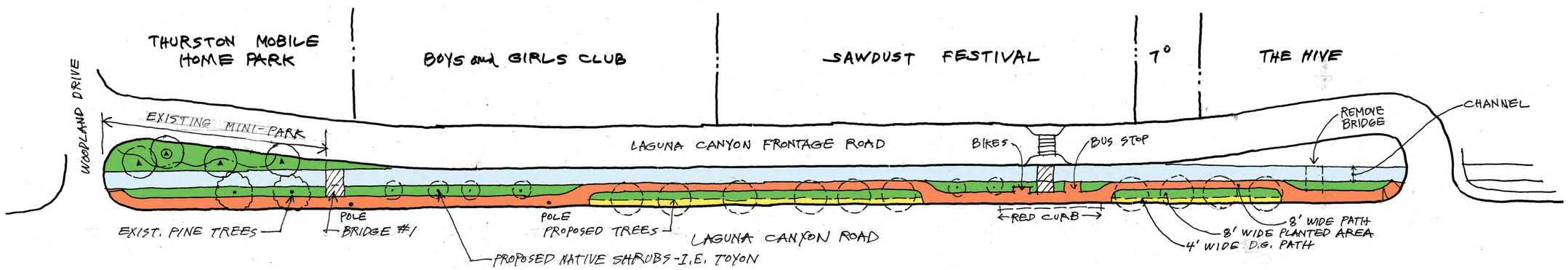


LAGUNA CANYON CREEK CHANNEL

**CONCEPT B**

* MEANDERING SIDEWALK TO ADD NEW TREES

# CIVIC ARTS DISTRICT

LAGUNA BEACH, CALIFORNIA

0 40 80 120 160 feet

SCALE: 1" = 40'

REF. NORTH

10/04/2021

**From:** Morgan, Austin
**To:** Beck, Arlen CD
**Cc:** Echeverria, Andrea
**Subject:** FW: Laguna Canyon Channel Replacement Project
**Date:** Wednesday, April 20, 2022 3:53:54 PM

---

[**NOTICE:** This message originated outside of City of Laguna Beach -- **DO NOT CLICK** on **links** or open **attachments** unless you are sure the content is safe.]

FYI.

**Austin Morgan, P.E.**
Senior Project Manager
**OC** Public Works| Infrastructure
601 N. Ross Street, Santa Ana, CA 92701
Direct: (714) 647-3981 | Cell: (714) 474-3453
Email: austin.morgan@ocpw.ocgov.com

---

**From:** Robert Borthwick <bob@bgb-inc.com>
**Sent:** Tuesday, April 19, 2022 5:19 PM
**To:** Trestik, Mark A <MATrestik@lagunabeachcity.net>; Morgan, Austin <Austin.Morgan@ocpw.ocgov.com>
**Subject:** Laguna Canyon Channel Replacement Project

**Attention:** This email originated from outside the County of Orange. Use caution when opening attachments or links.

Mark Trestik, LB City Engineer
Austin Morgan, OCPW Senior Project Manager

Thank you both for meeting me at the site last Friday and for your time to review the project. Following are my recommendations:

**Northern reach of project [adjacent to Mini Park]**

1. Concept: My wish for this upper area is that it could remain intact to avoid demolition of the established mini-park and its established vegetation. This preservation would necessitate a "retrofit method" of stabilizing the channel walls [utilizing steel beams and bracing] rather than a complete demolition and re-do of the concrete channel and park in this zone. A "retrofit" concept could include removal of the existing pines on the LCR side and the single Sycamore tree in the park [slated for removal] to reduce the load on the existing concrete walls. If that solution is not acceptable to OCFCD then the following suggestions apply:

2. Existing Sycamore trees: It is positive news that 3 out of the 4 existing California Sycamore trees can be preserved. It is expected that any pruning of these trees for

construction staging purposes will be minimal and that the root zones will be protected. Possibly this pruning could be done under supervision of the City rather than a County contractor ?

3. Existing landscaping: There are some plants existing in the park that were not shown on the plans, and some plants that were moved on-site prior to planting. It is expected that all on-site additions and adjustments will be reflected in the restored planting. Other existing large plant material on the northern end of the park [Yucca gloriosa, Rhus ovata] were growing on-site prior to the park being built in 2012 and were retained as "existing specimens". In particular, the Yucca is a full grown specimen and could be boxed and re-planted after the project is complete to preserve historical context on the site. It was discussed to possibly replace the existing Pittosporum tenuifolium shrub barrier with either Rhamnus californica [California Coffeeberry] or Ilex wilsonii [Wilson Holly] for a denser screen. The existing park has some Wilson Holly shrubs that were planted 10 years ago and are only about 6 feet tall. If a substitution is made we would suggest the California Coffeeberry. Note: Decomposed granite [DG] in the pedestrian areas is "stabilized".

4. Existing decorative stone edging: The cobblestones used for the planter borders were specifically ordered to be a "tan" color to match the existing canyon sandstone. These stones were available at a building supply in El Toro [and elsewhere]. This color selection is important, as the more typical "salt and pepper" color cobblestones would not be compatible with the sandstone hillsides. Ideally, the existing tan cobblestones would be salvaged and re-installed.

**Remainder of project [below Mini Park]**

5. Concept - channel reinforcement: My concept for the new channel is that the wall on the LCR side could be built thicker and with additional reinforcement so that larger native trees such as Coast Live Oaks and California Sycamores could be planted in the 10 ft wide planted area next to the creek channel. These species would comply with the approved Landscape and Scenic Highways Resource Document recommendations.

6. Street trees: It is good that Caltrans will now allow street trees adjacent to the curb [a change from the original submittal of this project]. From the list of Caltrans and City arborist approved trees you provided, I would recommend Prunus lyonii [Catalina Cherry] as this S Calif native tree is fairly vertical and will break up the long expanse of street frontage along the channel when the existing trees are removed. As we discussed in the field, to achieve a more organic [informal] streetscape the street trees could be spaced in asymmetrical locations [varied spacings] to avoid formality. The center of the tree wells should be between car spaces to avoid conflict with opening of passenger car doors.

7. Tree wells: It is recommended that the tree wells be 8 ft long x 5 ft deep [wide]. A flush brick header on 3 sides [omitting the curb side] would provide a decorative

visual cue to pedestrians to avoid the tree well. This brick detail would relate to the Broadway tree well detail in the Village Entrance area of the former bus depot. Interior of the tree well could be either DG or bark mulch [for a more rustic canyon look], or the recycled rubber chips used Downtown.

8. Sidewalk: The existing AC sidewalk is approx. 9 ft 2 inches wide. When the 5 ft wide tree wells are constructed, that width will be reduced to 4 ft 2 inches clear width from tree well to edge of pathway. This width complies with ADA requirements, but for a section of sidewalk that may include "beach cruiser" style bicycles, strollers, skateboards, etc, in addition to pedestrians, I recommend an overall width of 10 ft paved from back of curb [the equivalent paved pathway in the Village Entrance is 11 ft 2 inches]. To provide an even wider path of travel, a "safety shoulder" of 2 ft wide DG could be installed adjacent to the concrete walkway [in front of the planted area]. This DG "shoulder" detail has been used at Treasure Island Park at the Montage. It provides additional pedestrian width when necessary but keeps the scale of the concrete walkway reduced without looking too massive.

9. Landscaping: If the new western channel wall could be upgraded structurally, then informal plantings of California Live Oaks and California Sycamores could be planted within this approx. 10 ft wide planting area [per note #5 above]. This would comply with the approved LSHRD recommendations. Whether this wall upgrading is done or not, this planting area should be primarily native Laguna Canyon shrubs such as Toyon and Lemonade Berry. These shrubs were planted in the existing LCR streetscape and are thriving. Some of these larger specimens could possibly be boxed and retained for re-planting. Since Toyons can achieve some height, they should be used judiciously to not block the Sawdust elevation. Other succulents and flowering natives can also be included for accents to relate to the new Village Entrance plantings. I suggest reducing the quantity/density of ornamental grasses in this Frontage Road section [as compared to the VE] to achieve a more Riparian visual effect.

**Other Options**

10. Sidewalk finish: It is assumed that the color and finish of the existing Village Entrance concrete walkway will be continued into this Frontage Road section to Woodland Drive.

11. Guardrail at channel walls: It is assumed that the existing Village Entrance guardrails will be continued into this Frontage Road section to Woodland Drive.

I appreciate the opportuity to provide these comments on this most important project..

Regards,
Bob Borthwick

**Robert Borthwick** ASLA

Senior Principal

**BGB** | DESIGN GROUP
Landscape Architecture
Planning
Urban Design

3185-C1 Airway Avenue
Costa Mesa, CA 92626
714 545 2898  office
714 545 2878  fax
949 246 0459  cell

www.bgb-inc.com

## Echeverria, Andrea

**From:** Echeverria, Andrea
**Sent:** Tuesday, April 5, 2022 2:05 PM
**To:** 'Trestik, Mark A'
**Cc:** Morgan, Austin
**Subject:** RE: Laguna Canyon Channel Cooperative Agreement

Hi Mark,

Thank you for your patience with this item. Below are some responses to Bob Borthwick's letter for your review as well as our availability for this week and next week to meet with him. Let me know if any of these times work for you. Otherwise we could try to schedule a time on a Friday.

Thursday 4/7: 2-3pm
Tuesday 4/12: 11am-12pm
Thursday 4/14: 9am-11am

**Response to: Preservation of the Frontage Road Mini Park**

- Although bracing was not installed north of the pedestrian bridge closest to Woodland Drive, County Surveyors measured how far the channel wall tilted and determined a maximum displacement of 3.6 inches between the pedestrian crossing and Woodland Dr. which is about 7 times larger than what is allowable. In order for OCFCD to maintain the current flood control protection within the project limits for the next 75 years, OCFCD needs to replace the channel between Laguna Canyon Frontage Road and Woodland Drive.
- OCFCD looked at different alternatives to replace the channel with a goal of minimizing impacts. Unfortunately, the channel adjacent to the Frontage Road Mini Park cannot be accessed along Laguna Canyon Road due to high powered overhead SoCal Edison distribution power lines. The only feasible access to the channel is through the Frontage Road Mini Park. To reconstruct the Frontage Road Mini Park, OCFCD will take pictures and direct the Contractor to use those along with the record drawings provided by the City to reconstruct it.
- In the existing condition, there are four California Sycamore trees within the Mini Park. The northernmost tree adjacent to Woodland Drive will be removed due to its proximity to the channel and replaced with a new California Sycamore tree located 10' away from the channel. However, the other three trees within the Mini Park will be pruned and protected in place.

**Response to: Concept A and Concept B**

- We explored multiple options to save the trees between the channel and Laguna Canyon Road. OCFCD hired an arborist and they determined "the only way to prevent the risk of root encroachment along the wall would be a full tree removal." OCFCD also hired an engineer to perform a structural evaluation of the channel wall. They determined the tree roots applied "very large lateral pressures against the walls" which was "very detrimental to the wall and likely led to the collapse". In order to construct the channel, a shoring system approximately 4 feet behind the existing channel wall is required. With the recommendations from the arborist, engineer and to safely install the shoring, the trees must be removed between Laguna Canyon Road and the channel.
- After receiving comments from the City's Planning Commission, City Staff, and the public, OCFCD adjusted the plan to propose new street trees within decomposed granite (DG) tree wells at the back of the curb along Laguna Canyon Road. This approach provides the option to install 7 new trees along Laguna Canyon Road, ensures that trees are at least 10' from the channel, and is the most feasible option considering the numerous existing underground utilities. Planting trees at these locations will require Caltrans' approval since the trees fall within their jurisdiction.

**Response to: Caltrans Tree Setback Requirements**

- The Caltrans Highway Design Manual Topic 901 denotes the requirements for installing trees within the Caltrans right-of-way. OCFCD has diligently coordinated with Caltrans to understand which tree species and locations could be acceptable along Laguna Canyon Road. OCFCD is proposing installing small trees to align with Caltrans policies and will submit the design to Caltrans for their review and approval. Although the incorporation of trees on Laguna Canyon Road is subject to Caltrans approval, OCFCD understands the importance of the trees to the community and will continue to coordinate the tree layout and species with Caltrans to find a resolution.

Thank you,

**Andrea Echeverria, PE**
Civil Engineer
OC Infrastructure Programs **|** Project Management
Office: 714-667-9693 **|** Cell: 657-264-6527
andrea.echeverria@ocpw.ocgov.com
601 N. Ross Street, Santa Ana, CA 92701

| | |
|---|---|
| **From:** | Morgan, Austin |
| **To:** | Beck, Arlen CD; Caron, Martina CD |
| **Cc:** | Echeverria, Andrea |
| **Subject:** | FW: LAGUNA CANYON CHANNEL REPLACEMENT PROJECT |
| **Date:** | Monday, April 4, 2022 4:58:02 PM |

[**NOTICE:** This message originated outside of City of Laguna Beach -- **DO NOT CLICK** on **links** or open **attachments** unless you are sure the content is safe.]

Hi Arlen,

I received the comment below via the County's Project webpage. The resident has suggested replanting a different plant species to provide denser foliage that grows quicker for the plants adjacent to the Channel in the Frontage Road Mini Park. I am not sure how you want to present this suggestion to the Planning Commission, but I encouraged the resident to attend the upcoming meeting to provide their feedback. Thank you!

**Austin Morgan, P.E.**
Senior Project Manager
**OC** Public Works| Infrastructure
601 N. Ross Street, Santa Ana, CA 92701
Direct: (714) 647-3981 | Cell: (714) 474-3453
Email: austin.morgan@ocpw.ocgov.com

**From:** carmen Salazar <cimsalazar@gmail.com>
**Sent:** Wednesday, March 16, 2022 12:35 PM
**To:** Morgan, Austin <Austin.Morgan@ocpw.ocgov.com>
**Subject:** Re: LAGUNA CANYON CHANNEL REPLACEMENT PROJECT

**Attention:** This email originated from outside the County of Orange. Use caution when opening attachments or links.

Hi Austin,
Thanks for your email. I understand that the vegetation will be damaged and replaced in the The Frontage Road Mini Park. We wanted to check in on it because, we as a neighborhood depend on that screening to obscure the highway. As you know, it is a very congested section of the 133 and the vegetation really helps to visually minimize as well as damper the noise and exhaust fumes of the cars. Would it be possible to replace the pittosporum silver sheen with something that is denser in foliage if that is one of the plants that will need to be replaced? The Wilsons Holly or the California Coffeeberry from the approved plan would both be better options in terms of density. The Coffeeberry grows faster so that would be our preferred option of the approved palette. Thanks so much for your time. It might seem like a little thing but that screening makes a world of difference for us on Woodland and for our neighbors in the trailer park.
Best,
Carmen

On Thu, Mar 10, 2022 at 1:20 PM Morgan, Austin <Austin.Morgan@ocpw.ocgov.com> wrote:

> Hi Carmen,
>
> Unfortunately, the vegetation between the Boys and Girls Club to Woodland Drive adjacent to the channel will be damaged as a result of replacing it. However, we are going to replant the area between the channel and Laguna Canyon Road sidewalk with a plant palette similar to the City's recently completed Village Entrance Project. The Frontage Road Mini Park will be replanted to match the record drawings which were provided by the City. We are also going to take pictures throughout the mini park to help us replant that area. I hope this helps. Thank you!
>
> **Austin Morgan, P.E.**
> Senior Project Manager
> OC Public Works| Infrastructure
> 601 N. Ross Street, Santa Ana, CA 92701
> Direct: (714) 647-3981 | Cell: (714) 474-3453
> Email: austin.morgan@ocpw.ocgov.com
>
> ---
>
> **From:** OCPW Project Info <ProjectInfo@ocpw.ocgov.com>
> **Sent:** Thursday, March 3, 2022 3:21 PM
> **To:** Morgan, Austin <Austin.Morgan@ocpw.ocgov.com>
> **Subject:** FW: LAGUNA CANYON CHANNEL REPLACEMENT PROJECT
>
> ---
>
> **From:** carmen Salazar <cimsalazar@gmail.com>
> **Sent:** Thursday, March 3, 2022 12:54 PM
> **To:** OCPW Project Info <ProjectInfo@ocpw.ocgov.com>
> **Subject:** LAGUNA CANYON CHANNEL REPLACEMENT PROJECT
>
> **Attention:** This email originated from outside the County of Orange. Use caution when opening attachments or links.
>
> Hello Austin,
> Can you share the plan view of the replacement project in the area from the Boys and Girls Club to Woodland Drive? What vegetation is slated to be removed in the project? What vegetation will remain?
> Thanks very much,
> Carmen
>
> https://ocip.ocpublicworks.com/lcc

~~**5.1 Departmental Reports –** Scott Drapkin said that he was creating a schedule for the Open for Business meetings that would be held at the Susi Q Center and that the meetings would begin on Thursday, October 7, 2021. Commissioner Dubin asked if there were any incentives or useful tools that could be used to encourage businesses to come to Laguna Beach. Marc Wiener said that there was funding in the budget for marketing tools. Commissioner Kellenberg asked if there was a list of preferred businesses. Mr. Wiener said that staff would be working on developing a list of preferred businesses.~~

~~Mr. Wiener provided an update on City Hall in regard to COVID requirements, and he also provided an update on the Community Development Department.~~

~~Commissioner Kellenberg inquired about having an alternative format for the Housing and Human Services Committee to provide a presentation for the Commission. Commissioner Whitin said that she felt that the Commission needed the staff to provide a clear understanding on which of the sites could be developed under the City's current standards. Mr. Wiener suggested that staff could provide a presentation for the Commission and then the Commission could appoint a subcommittee to work with staff. Commissioner Kellenberg noted that the Housing and Human Services Committee had recommended that some of the sites should be listed in the Housing Element and that he had been advised by Mr. Wiener that due to the Housing Element Update deadline, there would not be enough time for staff to add the sites to the Housing Element Update. Commissioner Whitin asked if there could be an addendum to the Housing Element Update. Mr. Wiener said that staff could look into an addendum to the Housing Element Update.~~

~~Mr. Drapkin said that he would work with the Commissioners and the Housing and Human Services Committee to schedule a special meeting.~~

**5.2 Public Works Reports –**

**Orange County Public Works - Project Scope**

Mark Trestik reported that the City Council reviewed the project at the April 6, 2021 City Council meeting, and he reviewed the two actions that the City Council took on the project.

Orange County (OC) Public Works Project Manager Austin Morgan provided an introductory presentation on the Laguna Canyon Channel Replacement Project, located between Laguna Canyon Frontage Road and Woodland Drive, which consists of removing and replacing the rectangular concrete channel, small concrete pedestrian bridges that cross the channel, softscape and hardscape that may be damaged and/or removed in order to construct the project, and removal of trees adjacent to the project limits that pose a risk to the channel.

Commissioner Dubin asked for clarification on the location of the repairs. Mr. Morgan said that they would be replacing the channel from Laguna Canyon Frontage Road to Woodland Drive. Commissioner Dubin asked if the remaining mature trees would be removed. Mr. Morgan confirmed that the trees would be removed. Commissioner Dubin asked if there had been any discussion for creating a couple of locations for public art. Mr. Morgan said that they could look into creating a couple of locations for public art. Commissioner Dubin asked if they felt that the timeline was realistic. Mr. Morgan said that they were confident with their schedule. Commissioner Dubin inquired about the demolition process. Mr. Morgan said that the demolition would be done in phases to help minimize the impacts on the community and parking. Commissioner Dubin inquired about mitigation measures for a storm event. Mr. Morgan said that they will have a policy for monitoring storm events, and that they would be able to implement a procedure to protect the facility and to make sure that they are prepared for receiving a large flow of water.

Commissioner Sadler inquired about the history of the channel. OC Public Works Senior Project Manager Justin Golliher said that prior to the construction of the concrete channel, there was a natural creek. Commissioner Sadler asked if there could be a more natural channel to make it look more like a creek. Mr. Golliher explained that the channel was severely under capacity and that there was a plan for a secondary system that would be installed beneath Laguna Canyon Road. Commissioner Sadler inquired about the relocation of the bridge to Woodland Drive. Mr. Golliher said that the relocation of the bridge would improve pedestrian circulation and that there would be a dedicated path of a sidewalk that would be ADA-compliant. Commissioner Whitin noted that there were members of the community that were also looking for additional enhancement to the design, and she suggested that OC Public Works should look into alternative ways to get trees added to the project and to consider meandering the sidewalk. She also suggested that the Commission make a recommendation to the City Council for the responsible Agency to engineer the channel for possible acceptance of a lid in the future to create a physical and a visual connection between the open-space on the other side of Laguna Canyon Road, across Laguna Canyon Road, and all the way to the other canyon wall. Commissioner Whitin voiced her concern about the gap between the connection at the west end of the Frontage Road and Woodland Drive. Commissioner Dubin suggested placing a pedestrian bridge in front of the Boys and Girls Club.

Commissioner Kellenberg referred to the number of trees that were planted alongside Coast Highway, and he asked why there was a limit on the number of trees that could be planted alongside Laguna Canyon Road. Mr. Trestik explained that Caltrans limits tree planting because of the number of lawsuit settlements that they have had to pay out because of damages that were caused by trees. Mr. Trestik also noted that adding meandering sidewalk could eliminate street parking.

Mr. Morgan said that they would be working with Caltrans to see what could be negotiated for the project.

**Public Testimony Regarding the Project:** Penelope Milne, Canyon Alliance of Neighborhoods Defense Organization representative, said that there are City resource documents that make it clear that the City is to ensure that the character of the neighborhood landscape is protected and enhanced. Ms. Milne noted that the arborist's report does not recommend the removal of all mature trees, and she suggested that the mature trees be allowed to remain with root barriers. She also suggested having intermittent sections of articulated concrete block that would allow for planting in the wall, and she also noted that the current bridges create a high-water fountain when there is flooding and that the engineers should correct that when designing the new bridges. Ms. Milne asked the County to consider special parking arrangements for residents of Thurston HOA and Sara Thurston Park when parking on the Frontage Road is reduced during construction.

Bob Borthwick, landscape architect, voiced his support for not removing all of the mature trees, and he asked the OC Public Works staff to consider saving the two trees at the passive park that are slightly less than ten feet from the channel. Mr. Borthwick said that if the entire channel is being reconstructed, the pine trees would conflict with construction and that they would need to be removed. He suggested that pictures be taken of the park to make sure that the park is put back in its original configuration. Mr. Borthwick said that he believed that the Orange County Flood Control could be more moderate in terms of what types of trees could go in the 10-foot zone, and he suggested considering using asphalt for the walkways.

~~**5.3 Commissioners' Reports –** Commissioner Dubin inquired about the Highway 73 toll road becoming a free road. Mr. Drapkin said that he was not aware of any initiatives to change the Highway 73 toll road, and he said that he would speak to Public Works about Commissioner Dubin's inquiry.~~